TOSHIBA

G7 Adjustable Speed Drive Operation Manual

Document Number: 51546-009

Date: March, 2005

Introduction

Congratulations on the purchase of the new **G7 True Torque Control² Adjustable Speed Drive** (ASD). The **G7 True Torque Control² Adjustable Speed Drive** is a solid-state AC drive that features **True Torque Control²**. TIC's **Vector Control Algorithm** enables the motor to develop high starting torque and provide compensation for motor slip, which results in smooth, quick starts and highly efficient operation. The G7 uses digitally-controlled pulse width modulation. The programmable functions may be accessed via the easy-to-use menu or via the **Direct Access Numbers** (see page 59). This feature, combined with Toshiba's high-performance software, delivers unparalleled motor control and reliability.

The G7 is a very powerful tool, yet surprisingly simple to operate. The user-friendly **Electronic Operator Interface** (EOI) of the G7 has an easy-to-read 240 x 64 pixel graphical LCD screen. The **EOI** provides easy access to the many monitoring and programming features of the G7.

The motor control software is menu-driven, which allows for easy access to the motor control parameters and quick changes when required.

To maximize the abilities of your new G7, a working familiarity with this manual will be required. This manual has been prepared for the **G7 ASD** installer, user, and maintenance personnel. This manual may also be used as a reference guide or for training. With this in mind, use this manual to develop a system familiarity before attempting to install or operate the device.

Important Notice

The instructions contained in this manual are not intended to cover all details or variations in equipment types, nor may it provide for every possible contingency concerning the installation, operation, or maintenance of this equipment. Should additional information be required contact your Toshiba representative.

The contents of this manual shall not become a part of or modify any prior or existing agreement, commitment, or relationship. The sales contract contains the entire obligation of Toshiba International Corporation. The warranty contained in the contract between the parties is the sole warranty of Toshiba International Corporation and any statements contained herein do not create new warranties or modify the existing warranty.

Any electrical or mechanical modifications to this equipment without prior written consent of Toshiba International Corporation will void all warranties and may void the UL/CUL listing or other safety certifications. Unauthorized modifications may also result in a safety hazard or equipment damage.

Misuse of this equipment could result in injury and equipment damage. In no event will Toshiba Corporation be responsible or liable for direct, indirect, special, or consequential damage or injury that may result from the misuse of this equipment.

Contacting Toshiba's Customer Support Center

Toshiba's Customer Support Center can be contacted to obtain help in resolving any **Adjustable Speed Drive** system problem that you may experience or to provide application information.

The center is open from 8 a.m. to 5 p.m. (CST), Monday through Friday. The Support Center's toll free number is US (800) 231-1412/Fax (713) 466-8773 — Canada (800) 527-1204.

You may also contact Toshiba by writing to:

Toshiba International Corporation

13131 West Little York Road

Houston, Texas 77041-9990

Attn: ASD Product Manager.

For further information on Toshiba's products and services, please visit our website at **www.tic.toshiba.com**.

TOSHIBA INTERNATIONAL CORPORATION

G7 Adjustable Speed Drive

Please complete the Warranty Card supplied with the ASD and return it to Toshiba by prepaid mail. This will activate the 12 month warranty from the date of installation; but, shall not exceed 18 months from the shipping date.

Complete the following information and retain for your records.

Model Number: _____

Serial Number:_____

Project Number (if applicable):_____

Date of Installation:_____

Inspected By:_____

Name of Application:_____

About This Manual

This manual was written by the Toshiba Technical Publications Group. This group is tasked with providing technical documentation for the **G7 Adjustable Speed Drive**. Every effort has been made to provide accurate and concise information to you, our customer.

At Toshiba we're continuously searching for better ways to meet the constantly changing needs of our customers. Email your comments, questions, or concerns about this publication to **Technical-Publications-Dept@TIC.TOSHIBA.COM**.

Manual's Purpose and Scope

This manual provides information on how to safely install, operate, maintain, and dispose of your **G7 True Torque Control^2 Adjustable Speed Drive**. The information provided in this manual is applicable to the **G7 True Torque Control^2 Adjustable Speed Drive** only.

This operation manual provides information on the various features and functions of this powerful cost-saving device, including

- Installation,
- System operation,
- Configuration and menu options, and
- Mechanical and electrical specifications.

Included is a section on general safety instructions that describe the warning labels and symbols that are used throughout the manual. Read the manual completely before installing, operating, performing maintenance, or disposing of this equipment.

This manual and the accompanying drawings should be considered a permanent part of the equipment and should be readily available for reference and review. Dimensions shown in the manual are in metric and/or the English equivalent.

Because of our commitment to continuous improvement, Toshiba International Corporation reserves the right, without prior notice, to update information, make product changes, or to discontinue any product or service identified in this publication.

Toshiba International Corporation (TIC) shall not be liable for direct, indirect, special, or consequential damages resulting from the use of the information contained within this manual.

TOSHIBA is a registered trademark of the Toshiba Corporation. All other product or trade references appearing in this manual are registered trademarks of their respective owners.

This manual is copyrighted. No part of this manual may be photocopied or reproduced in any form without the prior written consent of Toshiba International Corporation.

© Copyright 2005 Toshiba International Corporation.

All rights reserved.

Printed in the U.S.A.

Table of Contents

CE Compliance Requirements **10**
EMC Installation Guidelines 10

Motor Characteristics **13**
Motor Autotuning 13
Pulse Width Modulation Operation 13
Low Speed Operation 13
Overload Protection Adjustment 13
Operation Above 60 Hz 14
Power Factor Correction 14
Light Load Conditions 14
Motor/Load Combinations 14
Load-produced Negative Torque 15
Motor Braking 15

ASD Characteristics **16**
Over-current Protection 16
ASD Capacity 16
Using Vector Control 16
Local/Remote Operation 16

Installation and Connections **17**
Installation Notes 17
Mounting the ASD 18
Connecting the ASD 19
I/O and Control 22
G7 ASD Control 26
Typical Connection Diagram 30

Command Mode and Frequency Mode Control **31**
Command Control (F003) 31
Frequency Control (F004) 32
Override Operation 34

Electronic Operator Interface **36**
EOI Features 36
EOI Operation 37

System Operation **38**
Initial Setup 38
Operation (Local) 38
Default Setting Changes 39

Startup Wizard Requirements **40**

System Configuration and Menu Options **43**
Root Menus 43

Direct Access Parameter Information **59**
Direct Access Parameters/Numbers 59

Alarms, Trips, and Troubleshooting 173
Alarms and Trips 173
Alarms 174
User Notification Codes 176
Trips/Faults 176

Enclosure Dimensions and Conduit Plate Information 182
Enclosure Dimensions/Weight 182
Conduit Plate Information 187
Conduit Extender Box (option) 189

EOI Remote Mounting 190

Current/Voltage Specifications 193

Cable/Terminal Specifications 195
Dynamic Braking Resistor Wire/Cable Specifications 198

Link Reactor Information 199

G7 Optional Devices 200

G7 ASD Spare Parts Listing 201

General Safety Information

DO NOT attempt to install, operate, maintain or dispose of this equipment until you have read and understood all of the product safety information and directions that are contained in this manual.

Safety Alert Symbol

The **Safety Alert Symbol** indicates that a potential personal injury hazard exists. The symbol is comprised of an equilateral triangle enclosing an exclamation mark.

Signal Words

Listed below are the signal words that are used throughout this manual followed by their descriptions and associated symbols. When the words **DANGER**, **WARNING** and **CAUTION** are used in this manual they will be followed by important safety information that must be carefully adhered to.

The word **DANGER** preceded by the safety alert symbol indicates that an imminently hazardous situation exists that, if not avoided, will result in death or serious injury to personnel.

DANGER

The word **WARNING** preceded by the safety alert symbol indicates that a potentially hazardous situation exists that, if not avoided, could result in death or serious injury to personnel.

WARNING

The word **CAUTION** preceded by the safety alert symbol indicates that a potentially hazardous situation exists which, if not avoided, may result in minor or moderate injury.

CAUTION

The word **CAUTION** without the safety alert symbol indicates a potentially hazardous situation exists which, if not avoided, may result in equipment and property damage.

CAUTION

Special Symbols

To identify special hazards, other symbols may appear in conjunction with the **DANGER**, **WARNING** and **CAUTION** signal words. These symbols indicate areas that require special and/or strict adherence to the procedures to prevent serious injury to personnel or death.

Electrical Hazard Symbol

A symbol which indicates a hazard of injury from electrical shock or burn. It is comprised of an equilateral triangle enclosing a lightning bolt.

Explosion Hazard Symbol

A symbol which indicates a hazard of injury from exploding parts. It is comprised of an equilateral triangle enclosing an explosion image.

Equipment Warning Labels

DO NOT attempt to install, operate, perform maintenance, or dispose of this equipment until you have read and understood all of the product labels and user directions that are contained in this manual.

Shown below are examples of safety labels that may be found attached to the equipment. **DO NOT** remove or cover any of the labels. If the labels are damaged or if additional labels are required, contact your Toshiba sales representative for additional labels.

Labels attached to the equipment are there to provide useful information or to indicate an imminently hazardous situation that may result in serious injury, severe property and equipment damage, or death if the instructions are not followed.

Figure 1. Examples of labels that may be found on the equipment.

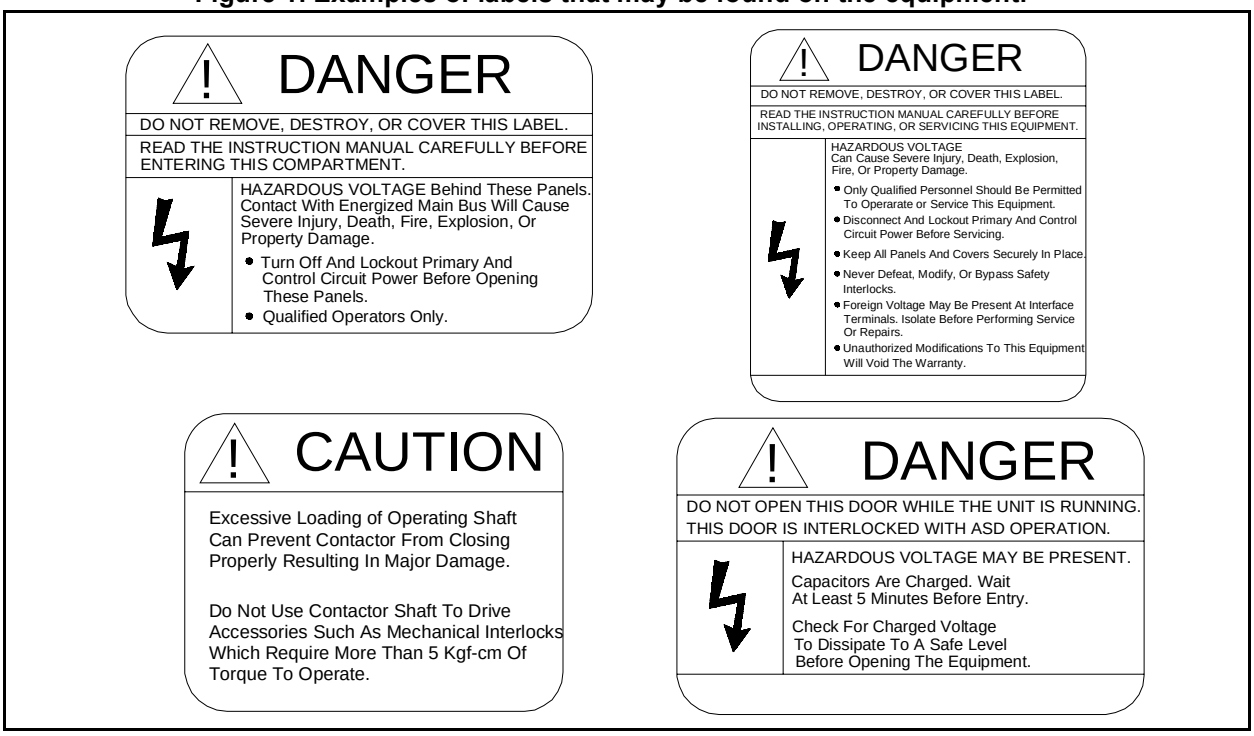

Qualified Personnel

Installation, operation, and maintenance shall be performed by **Qualified Personnel Only**. A **Qualified Person** is one that has the skills and knowledge relating to the construction, installation, operation, and maintenance of the electrical equipment and has received safety training on the hazards involved (Refer to the latest edition of NFPA 70E for additional safety requirements).

Qualified Personnel shall:

- Have carefully read the entire operation manual.
- Be familiar with the construction and function of the ASD, the equipment being driven, and the hazards involved.
- Able to recognize and properly address hazards associated with the application of motor-driven equipment.
- Be trained and authorized to safely energize, de-energize, ground, lockout/tagout circuits and equipment, and clear faults in accordance with established safety practices.
- Be trained in the proper care and use of protective equipment such as safety shoes, rubber gloves, hard hats, safety glasses, face shields, flash clothing, etc., in accordance with established safety practices.
- Be trained in rendering first aid.

For further information on workplace safety visit www.osha.gov.

Equipment Inspection

- Upon receipt of the equipment inspect the packaging and equipment for shipping damage.
- Carefully unpack the equipment and check for parts that were damaged during shipping, missing parts, or concealed damage. If any discrepancies are discovered, it should be noted with the carrier prior to accepting the shipment, if possible. File a claim with the carrier if necessary and immediately notify your Toshiba sales representative.
- **DO NOT** install or energize equipment that has been damaged. Damaged equipment may fail during operation resulting in equipment damage or personal injury.
- Check to see that the rated capacity and the model number specified on the nameplate conform to the order specifications.
- Modification of this equipment is dangerous and must not be performed except by factory trained representatives. When modifications are required contact your Toshiba sales representative.
- Inspections may be required before and after moving installed equipment.
- Keep the equipment in an upright position.
- Contact your Toshiba sales representative to report discrepancies or for assistance if required.

Handling and Storage

- Use proper lifting techniques when moving the ASD; including properly sizing up the load, getting assistance, and using a forklift if required.
- Store in a well-ventilated covered location and preferably in the original carton if the equipment will not be used upon receipt.
- Store in a cool, clean, and dry location. Avoid storage locations with extreme temperatures, rapid temperature changes, high humidity, moisture, dust, corrosive gases, or metal particles.
- The storage temperature range of the **G7 ASD** is 14° to 104° F (-10 to 40° C).
- Do not store the unit in places that are exposed to outside weather conditions (i.e., wind, rain, snow, etc.).
- Store in an upright position.

Disposal

Never dispose of electrical components via incineration. Contact your state environmental agency for details on disposal of electrical components and packaging in your area.

Installation Precautions

Location and Ambient Requirements

- The Toshiba ASD is intended for permanent installations only.
- Installation should conform to the **2002 National Electrical Code — Article 110** (NEC) (*Requirements For Electrical Installations*), all regulations of the **Occupational Safety and Health Administration**, and any other applicable national, regional, or industry codes and standards.
- Select a mounting location that is easily accessible, has adequate personnel working space, and adequate illumination for adjustment, inspection, and maintenance of the equipment (refer to 2002 NEC Article 110-13).
- A noncombustible insulating floor or mat should be provided in the area immediately surrounding the electrical system.
- **Do Not** mount the ASD in a location that would produce catastrophic results if it were to fall from its mounting location (equipment damage or injury).
- **Do Not** mount the ASD in a location that would allow it to be exposed to flammable chemicals or gases, water, solvents, or other fluids.
- Avoid installation in areas where vibration, heat, humidity, dust, fibers, steel particles, explosive/ corrosive mists or gases, or sources of electrical noise are present.
- The installation location shall not be exposed to direct sunlight.
- Allow proper clearance spaces for installation. Do not obstruct the ventilation openings. Refer to the section titled Installation and Connections on pg. 17 for further information on ventilation requirements.
- The ambient operating temperature range of the **G7 ASD** is 14° to 104° F (-10 to 40° C).
- See the section titled Installation and Connections on pg. 17 for additional information on installing the drive.

Mounting Requirements

- Only **Qualified Personnel** should install this equipment.
- Install the unit in a secure and upright position in a well-ventilated area.
- A noncombustible insulating floor or mat should be provided in the area immediately surrounding the electrical system at the place where maintenance operations are to be performed.
- As a minimum, the installation of the equipment should conform to the NEC Article 110 Requirements For Electrical Installations, OSHA, as well as any other applicable national, regional, or industry codes and standards.
- Installation practices should conform to the latest revision of NFPA 70E Electrical Safety Requirements for Employee Workplaces.
- It is the responsibility of the person installing the ASD or the electrical maintenance personnel to ensure that the unit is installed into an enclosure that will protect personnel against electric shock.

Conductor Routing and Grounding

WARNING

- Use separate metal conduits for routing the input power, output power, and control circuits and each shall have its own ground cable.
- A separate ground cable should be run inside the conduit with the input power, output power, and and control circuits.
- **DO NOT** connect control terminal strip return marked CC to earth ground.
- Always ground the unit to prevent electrical shock and to help reduce electrical noise.
- It is the responsibility of the person installing the ASD or the electrical maintenance personnel to provide proper grounding and branch circuit protection in accordance with the **2002 NEC** and any applicable local codes.

The Metal Of Conduit Is Not An Acceptable Ground.

Power Connections

DANGER

Contact With Energized Wiring Will Cause Severe Injury Or Death.

- Turn off, lockout, and tagout all power sources before proceeding to connect the power wiring to the equipment.
- After ensuring that all power sources are turned off and isolated in accordance with established lockout/tagout procedures, connect three-phase power source wiring of the correct voltage to the correct input terminals and connect the output terminals to a motor of the correct voltage and type for the application (refer to NEC Article 300 – Wiring Methods and Article 310 – Conductors For General Wiring). Size the branch circuit conductors in accordance with NEC Table 310.16.
- If multiple conductors that are smaller than the recommended sizes are used in parallel for the input or output power, each branch of the parallel set shall have its own conduit and not share its conduit with other parallel sets (i.e., place U1, V1, and W1 in one conduit and U2, V2, and W2 in another) (refer to NEC Article 300.20 and Article 310.4). National and local electrical codes should be

referenced if three or more power conductors are run in the same conduit (refer to 2002 NEC Article 310 adjustment factors on page 70-142).

- Ensure that the 3-phase input power is **Not** connected to the output of the ASD. This will damage the ASD and may cause injury to personnel.
- Do not install the ASD if it is damaged or if it is missing any component(s).
- **Do Not** connect resistors across terminals PA – PC or PO – PC. This may cause a fire.
- Ensure the correct phase sequence and the desired direction of motor rotation in the **Bypass** mode (if applicable).
- Turn the power on only after attaching and/or securing the front cover.

Protection

- Ensure that primary protection exists for the input wiring to the equipment. This protection must be able to interrupt the available fault current from the power line. The equipment may or may not be equipped with an input disconnect (option).
- All cable entry openings must be sealed to reduce the risk of entry by vermin and to allow for maximum cooling efficiency.
- Follow all warnings and precautions and do not exceed equipment ratings.
- If using multiple motors provide separate overload protection for each motor and use V/f control.
- External dynamic braking resistors must be thermally protected.
- It is the responsibility of the person installing the ASD or the electrical maintenance personnel to setup the **Emergency Off** braking system of the ASD. The function of the **Emergency Off** braking function is to remove output power from the drive in the event of an emergency. A supplemental braking system may also be engaged in the event of an emergency. For further information on braking systems, see DC Injection Braking Start Frequency on pg. 105 and Dynamic Braking Enable on pg. 112.

Note: *A supplemental emergency stopping system should be used with the ASD. Emergency stopping should not be a task of the ASD alone.*

- Follow all warnings and precautions and do not exceed equipment ratings.

System Integration Precautions

The following precautions are provided as general guidelines for the setup of the ASD within the system.

- The Toshiba ASD is a general-purpose product. It is a system component only and the system design should take this into consideration. Please contact your Toshiba sales representative for application-specific information or for training support.
- The Toshiba ASD is part of a larger system and the safe operation of the ASD will depend on observing certain precautions and performing proper system integration.
- A detailed system analysis and job safety analysis should be performed by the systems designer and/or systems integrator before the installation of the ASD component. Contact your Toshiba sales representative for options availability and for application-specific system integration information if required.

Personnel Protection

- Installation, operation, and maintenance shall be performed by **Qualified Personnel <u>Only</u>**.
- A thorough understanding of the ASD will be required before the installation, operation, or maintenance of the ASD.

⚠ WARNING ⚠

- Rotating machinery and live conductors can be hazardous and shall not come into contact with humans. Personnel should be protected from all rotating machinery and electrical hazards at all times.
- Insulators, machine guards, and electrical safeguards may fail or be defeated by the purposeful or inadvertent actions of workers. Insulators, machine guards, and electrical safeguards are to be inspected (and tested where possible) at installation and periodically after installation for potential hazardous conditions.
- Do not allow personnel near rotating machinery. Warning signs to this effect shall be posted at or near the machinery.
- Do not allow personnel near electrical conductors. Human contact with electrical conductors can be fatal. Warning signs to this effect shall be posted at or near the hazard.
- Personal protection equipment shall be provided and used to protect employees from any hazards inherent to system operation.
- Follow all warnings and precautions and do not exceed equipment ratings.

System Setup Requirements

- When using the ASD as an integral part of a larger system, it is the responsibility of the ASD installer or maintenance personnel to ensure that there is a fail-safe in place, i.e., an arrangement designed to switch the system to a safe condition if there is a fault or failure.
- System safety features should be employed and designed into the integrated system in a manner such that system operation, even in the event of system failure, will not cause harm or result in personnel injury or system damage (i.e., E-Off, Auto-Restart settings, System Interlocks, etc.).
- The programming setup and system configuration of the ASD may allow it to start the motor unexpectedly. A familiarity with the Auto-restart settings are a requirement to use this product.

- Improperly designed or improperly installed system interlocks may render the motor unable to start or stop on command.
- The failure of external or ancillary components may cause intermittent system operation, i.e., the system may start the motor without warning.
- There may be thermal or physical properties, or ancillary devices integrated into the overall system that may allow for the ASD to start the motor without warning. Signs at the equipment installation must be posted to this effect.
- If a secondary magnetic contactor (MC) is used between the ASD and the load, it should be interlocked to halt the ASD before the secondary contact opens. If the output contactor is used for bypass operation, it must be interlocked such that commercial power is never applied to the ASD output terminals (U, V, W).
- Power factor improvement capacitors or surge absorbers must not be installed on the output of the ASD.
- Use of the built-in system protective features is highly recommended (i.e., E-Off, Overload Protection, etc.).
- The operating controls and system status indicators should be clearly readable and positioned where the operator can see them without obstruction.
- Additional warnings and notifications shall be posted at the equipment installation location as deemed required by **Qualified Personnel**.
- Follow all warnings and precautions and do not exceed equipment ratings.

Operational and Maintenance Precautions

⚠ WARNING ⚠

- Turn off, lockout, and tagout the main power, the control power, and instrumentation connections before inspecting or servicing the drive, or opening the door of the enclosure.
- Turn off, lockout, and tagout the main power, the control power, and instrumentation connections before proceeding to disconnect or connect the power wiring to the equipment.
- The capacitors of the ASD maintain a residual charge for a period of time after turning the ASD off. The required time for each ASD typeform is indicated with a cabinet label and a **Charge LED**. Wait for at least the minimum time indicated on the enclosure-mounted label and ensure that the **Charge LED** has gone out before opening the door of the ASD once the ASD power has been turned off.
- Turn the power on only after attaching (or closing) the front cover and **Do Not** remove the front cover of the ASD when the power is on.
- **Do Not** attempt to disassemble, modify, or repair the ASD. Call your Toshiba sales representative for repair information.
- Do not place any objects inside of the ASD.
- If the ASD should emit smoke or an unusual odor or sound, turn the power off immediately.
- The heat sink and other components may become extremely hot to the touch. Allow the unit to cool before coming in contact with these items.
- Remove power from the ASD during extended periods of non-use.
- The system should be inspected periodically for damaged or improperly functioning parts, cleanliness, and to ensure that the connectors are tightened securely.

- Ensure that the **Run** functions (**F**, **R**, **Preset Speed**, etc.) of the ASD are off before performing a **Reset**. The post-reset settings may allow the ASD to start unexpectedly.
- **Retry** or **Reset** settings may allow the motor to start unexpectedly. Warnings to this effect should be clearly posted near the ASD and motor.
- In the event of a power failure, the motor may restart after power is restored.
- Follow all warnings and precautions and do not exceed equipment ratings.

DO NOT install, operate, perform maintenance, or dispose of this equipment until you have read and understood all of the product warnings and user directions. Failure to do so may result in equipment damage, operator injury, or loss of life.

Service Life Information

Part Name	Service Life	Remarks
Large Capacity Electrolytic Capacitor	5 Years	When not used for long periods, charge semi-annually.
Cooling Fan	26,000 Hours	
CN Connectors	100 Connects/Disconnects	
On-board Relays	500,000 Actuations	

CE Compliance Requirements

In addition to the local and regional safety requirements, this section describes additional criteria that must be met to qualify for **European Conformity** (CE) certification. All relevant apparatus placed on the European market is required to comply to the European Community directive on electromagnetic compatibility (EMC). The following instructions provide a means of compliance for the 7-series of ASDs. A Technical Construction File (TFC) indicates the rationale used to declare compliance and is on file at Toshiba International Corporation, Houston, Texas U.S.A.

EMC Installation Guidelines

All systems placed on the European market are required to comply with the European Community directive regarding electromagnet compatibility (EMC). Toshiba ensures that all systems deployed in the European market have been screened and are in 100% compliance with the following standards:

- Radiated Interference: EN 55011 Group 1 Class A
- Mains Interference: EN 55011 Group 1 Class A
- Radiated Susceptibility: IEC 801-3 1984
- Conducted RFI Susceptibility: prEN55101-4 (prIEC801-6) Doc 90/30270
- Electrostatic Discharge: IEC801-2 1991
- Electrical Fast Transient: IEC 801-4 1988
- Surge: IEC1000-4-5 1995 2 KV line-to-line, 4 KV line-to-earth
- Voltage Interruption: IEC 1000-4-11

General EMC Guidelines for Consideration

- Input filters of the appropriate rating shall be used.
- Proper grounding is a requirement.
- Grounds shall be kept to the minimum length to accomplish the connection.
- Grounds shall have low RF impedance.
- A central ground shall employed in a complex system.
- Paint or corrosion can hamper good grounding; remove as required.
- Keep control and power cabling separated. Minimize exposed (unscreened) cable.
- Use 3600 screened connections where possible.

CE Compliant Installation Guidelines

ASDs should be installed in accordance with the following guidelines.

1. **Filtering** — An input filter shall be used with the ASD. A Schaffner FN258 series input filter of the appropriate rating shall be mounted next to the ASD.
2. **Mechanical** — The ASD and the associated equipment shall be mounted on a flat metallic backplane. A minimum space of 5 cm (2 inches) shall be between the ASD and the filter to allow for ventilation. The filter output cable is to be connected from the bottom of the filter to the ASD power input and is to be the minimum length required for a connection. See Table 1 on page 11 for filter selection assistance.

Units received as an Open Chassis shall not be placed into operation until being placed into an approved enclosure that will protect personnel against electrical shock.

Opening and closing of enclosures or barriers should be possible only with the use of a key or a tool.

3. **Cabling** — The power, filter, and motor cables shall be of the appropriate current rating. The cables shall be connected in accordance with the guidelines of the manufacturer and the applicable local and national agencies. A 4-core screened cable (such as RS 379-384) is to be used for the power and earth connections to minimize RF emissions. Control cabling must be screened using P/N RS 367-347 or a similar component.

4. **Grounding** — The mains (input) ground shall be connected at the ground terminal provided on the filter. The filter and motor shall be grounded at the ground terminals provided in the ASD.

5. **Screening** — The mains (input) screen is to be connected to the metallic back-plane at the filter; remove any finish coating as required. The screen over the filter output cables, the motor cable screen, and the control wire screens must be connected to the ASD case using glands or conduit connectors. The motor cable screen shall be connected to the motor case. When using a braking resistor, the cabling between the resistor and ASD shall also be screened. This screen shall connect to both the ASD enclosure and the resistor enclosure.

6. Where residual-current-operated protective device (RCD) is used for protection in case of direct or indirect contact, only RCD of type B is allowed on the supply side of this Electronic Equipment (EE). Otherwise, another protective measure shall be applied, such as separation of the EE from the environment by double or feinforced insulation, or isolation of the EE and the supply system by a transformer.

See the G7 Filter Selection below for the recommended input filters for a given typeform.

Table 1.

G7 Filter Selection Table			
230V		VT130G7U4110B	FN258-30
VT130G7U2010B	FN258-7	VT130G7U4160B	
VT130G7U2015B	FN258-16	VT130G7U4220B	FN258-42
VT130G7U2025B		VT130G7U4270B	FN258-55
VT130G7U2035B		VT130G7U4330B	
VT130G7U2055B	FN258-30	VT130G7U4400B	FN258-75
VT130G7U2080B		VT130G7U4500B	FN258-100
VT130G7U2110B	FN258-42	VT130G7U4600B	
VT130G7U2160B	FN258-75	VT130G7U4750B	FN258-130
VT130G7U2220B	FN258-100	VT130G7U410KB	FN258-180
VT130G7U2270B		VT130G7U412KB	FS5236-300
VT130G7U2330B	FN258-130	VT130G7U415KB	

G7 Filter Selection Table

460V	
VT130G7U4015B	FN258-7
VT130G7U4025B	
VT130G7U4035B	
VT130G7U4055B	FN258-16
VT130G7U4080B	
VT130G7U4110B	FN258-30
VT130G7U4160B	
VT130G7U4220B	FN258-42
VT130G7U4270B	FN258-55
VT130G7U4330B	
VT130G7U4400B	FN258-75
VT130G7U4500B	FN258-100
VT130G7U4600B	
VT130G7U4750B	FN258-130
VT130G7U410KB	FN258-180
VT130G7U412KB	FS5236-300
VT130G7U415KB	
VT130G7U420KB	FS5236-500
VT130G7U425KB	
VT130G7U430KB	
VT130G7U4015B	FN258-7
VT130G7U4025B	
VT130G7U4035B	
VT130G7U4055B	FN258-16
VT130G7U4080B	

VT130G7U420KB	FS5236-500
VT130G7U425KB	
VT130G7U430KB	
600V	
VT130G7U6015B	FN258-7
VT130G7U6025B	
VT130G7U6035B	
VT130G7U6055B	FN258-16
VT130G7U6080B	
VT130G7U6110B	
VT130G7U6160B	FN258-30
VT130G7U6220B	FN258-42
VT130G7U6270B	
VT130G7U6330B	FN258-55
VT130G7U6400B	
VT130G7U6500B	FN258-75
VT130G7U6600B	FN258-100
VT130G7U6750B	
VT130G7U610KB	FN258-130
VT130G7U612KB	FS5236-180
VT130G7U615KB	
VT130G7U620KB	FS5236-300
VT130G7U625KB	FS5236-500
VT130G7U630KB	

Motor Characteristics

Listed below are some variable speed AC motor control concepts with which the user of the **G7 Adjustable Speed Drive** should become familiar.

Motor Autotuning

Motor production methods may cause minor differences in the motor operation. The negative effects of these differences may be minimized by using the **Autotune** feature of the **G7 ASD**. **Autotuning** is a function of the G7 that measures several parameters of the connected motor and places these readings in a stored table. The software uses the information in the table to help optimize the response of the ASD to application-specific load and operational requirements. The **Autotuning** function may be enabled for automatic tuning, configured manually at **F400**, or disabled.

The measured parameters include the rotor resistance, the stator resistance, the required excitation inductance, rotational inertia values, and leakage inductance values.

The **G7 ASD** is also equipped with a factory-loaded table of motor parameters that fit several different types of motors. To use this function, disable **Autotune** and select a motor type at **F413**.

Pulse Width Modulation Operation

The **G7 ASD** uses a sinusoidal **Pulse Width Modulation** (PWM) control system. The output current waveform generated by the ASD approaches that of a perfect sine wave; however, the output waveform is slightly distorted. For this reason, the motor may produce more heat, noise, and vibration when operated by an ASD, rather than directly from commercial power.

Low Speed Operation

Operating a general-purpose motor at lower speeds may cause a decrease in the cooling ability of the motor. Reducing the torque requirement of the motor at lower speeds will decrease the generated heat at lower speeds.

When the motor is to be operated at low speed (less than 50% of full speed) and at the rated torque continuously, a Toshiba VF motor (designed for use in conjunction with an ASD) is recommended. When the ASD is used with a VF motor, the **VF Motor** overload protection setting must be enabled (see Program ⇒ Protection Parameters ⇒ Overload ⇒ **V/f Motor Enable/Disable**).

Overload Protection Adjustment

The **G7 ASD** software monitors the output current of the system and determines when an overload condition occurs. The overload current level is a percentage of the rating of the motor. This function protects the motor from overload.

The default setting for the overload detection circuit is set to the maximum rated current of the ASD at the factory. This setting will have to be adjusted to match the rating of the motor with which the ASD is to be used. To change the overload reference level, see **Electronic Thermal Protection #1 on pg. 154**.

Operation Above 60 Hz

A motor produces more noise and vibration when it is operated at frequencies above 60 Hz. Also, when operating a motor above 60 Hz, the rated limit of the motor or its bearings may be exceeded; this may void the motor warranty.

Contact the motor manufacturer for additional information before operating the motor above 60 Hz.

Power Factor Correction

DO NOT connect a power factor correction capacitor or surge absorber to the output of the ASD.

If the ASD is used with a motor that is equipped with a capacitor for power factor correction, remove the capacitor from the motor.

Connecting either of these devices to the output of the ASD may cause the ASD to malfunction and trip, or the output device may cause an over-current condition resulting in damage to the device or the ASD.

Light Load Conditions

When a motor is operated under a continuous light load (i.e., at a load of less than 50% of its rated capacity) or it drives a load which produces a very small amount of inertia, it may become unstable and produce abnormal vibration or trips because of an over-current condition. In such a case, the carrier frequency may be lowered to compensate for this undesirable condition (see Program ⇒ Special Control Parameters ⇒ **Carrier Frequency**).

Note: *For proper operation, the carrier frequency must be 2.2 kHz or above except when operating in the **Constant Torque**, **Variable Torque**, or the **5-Point Setting** modes.*

Motor/Load Combinations

When the ASD is used in combination with one of the following motors or loads, it may result in unstable operation.

- A motor with a rated capacity that exceeds the motor capacity recommended for the ASD.
- An explosion-proof motor.

When using the ASD with an explosion-proof motor or other special motor types, lower the carrier frequency to stabilize the operation. **DO NOT** set the carrier frequency below 2.2 kHz if operating the system in the vector control mode.

Note: *For proper operation, the carrier frequency must be 2.2 kHz or above except when operating in the **Constant Torque**, **Variable Torque**, or the **5-Point Setting** modes.*

- If the motor that is coupled to a load that has a large backlash or a reciprocating load, use one of the following procedures to stabilize its operation.
  - Adjust the **S-pattern** acceleration/deceleration setting,
  - If in the **Vector** control mode, adjust the response time, or
  - Switch to the **Constant Torque** control mode.

Load-produced Negative Torque

When the ASD is used with a load that produces negative torque (an overhauling load), the over-voltage or over-current protective functions of the ASD may cause nuisance tripping.

To minimize the undesirable effects of negative torque the dynamic braking system may be used. The dynamic braking system converts the regenerated energy into heat that is dissipated using a braking resistor. The braking resistor must be suitably matched to the load. Dynamic braking is also effective in reducing the DC bus voltage during a momentary over-voltage condition.

⚠ CAUTION

If under extreme conditions the dynamic braking system or a component of this system were to fail, the dynamic braking resistor may experience an extended over-current condition. The DBR circuit was designed to dissipate excessive amounts of heat and if the extended over-current condition were allowed to exceed the circuit parameters, this condition could result in a fire hazard.

To combat this condition, the 3-phase input may be connected using contactors that are configured to open in the event of an extended DBR over-current condition or an internal circuit failure. Using a thermal sensor and/or overload protection as the 3-phase input contactor drive signal, the contactors will open and remove the 3-phase input power in the event of an extended DBR over-current or system over-voltage condition.

Motor Braking

The motor may continue to rotate and coast to a stop after being shut off due to the inertia of the load. If an immediate stop is required, a braking system should be used. The two most common types of motor braking systems used with the **G7 ASD** are **DC Injection Braking** and **Dynamic Braking**.

For further information on braking systems, see **DC Injection Braking on pg. 105** and **Dynamic Braking Enable on pg. 112**.

ASD Characteristics

Over-current Protection

Each **G7 ASD** model was designed for a specified operating power range. The ASD will incur a trip if the design specifications are exceeded.

However, the ASD may be operated at 110% of the specified output-current range continuously or at 150% for a limited amount of time as indicated in the section titled Current/Voltage Specifications on pg. 193. Also, the Overcurrent Stall Level may be adjusted to help with nuisance over-current trips (see **F601**).

When using the ASD for an application that controls a motor which is rated significantly less than the maximum current rating of the ASD, the over-current limit (Thermal Overload Protection) setting will have to be changed to match the application. For further information on this parameter, see Electronic Thermal Protection #1 on pg. 154.

ASD Capacity

The **G7 ASD** must not be used with a motor that has a significantly larger capacity, even if the motor is operated under a small load. An ASD being used in this way will be susceptible to a high-output peak current which may result in nuisance tripping.

Do not apply a level of input voltage to an ASD that is beyond that which the ASD is rated. The input voltage may be stepped down when required with the use of a step-down transformer or some other type of voltage-reduction system.

Using Vector Control

Using **Vector Control** enables the system to produce very high torque over the entire operating range even at extremely low speeds. **Vector Control** may be used with or without feedback. However, using feedback increases the speed accuracy for applications requiring precise speed control. Enabling the **Automatic Energy Savings** further increases the efficiency of the **G7 ASD** while maintaining its robust performance.

Vector Control is not capable of operating multiple motors connected in parallel.

See **F015 on pg. 64** for further information on using **Vector Control**.

Local/Remote Operation

While running in the **Local** mode at a non-zero speed, if the RJ45 connector is removed from the **EOI** and then reinserted, the ASD remains in the **Local** mode even though the **Local** LED is off (press **Run** to illuminate the **Local** LED). The ASD output remains at the frequency of the **Frequency Command** field at the time of the disconnect so long as the connector is disconnected.

Once reinserted, the reference frequency that was loaded into the EEPROM (not RAM) before the disconnect will be the frequency to which the ASD output will return.

To prevent this condition, before disconnecting the RJ45 connector ensure that the ASD is off.

Installation and Connections

The **G7 True Torque Control^2 Adjustable Speed Drive** may be set up initially by performing a few simple configuration settings. To operate properly, the ASD must be securely mounted and connected to a power source (3-phase AC input at the **L1/R**, **L2/S**, and **L3/T** terminals). The control terminals of the ASD may be used by connecting the terminals of the **Control Terminal Strip** to the proper sensors or signal input sources (see the section titled I/O and Control on pg. 22).

Note: *The optional **ASD-Multicom** boards may be used to expand the I/O functionality of the ASD. See the section titled G7 Optional Devices on pg. 200 for further information on the available options.*

The output terminals of the ASD (**T1/U**, **T2/V**, and **T3/W**) must be connected to the motor that is to be controlled (see Figure 18 on pg. 30).

As a minimum, the installation of the ASD shall conform to **Article 110** of the **2002 NEC**, the **Occupational Safety and Health Administration** requirements, and to any other local and regional industry codes and standards.

Upon initial system powerup, the **Startup Wizard** starts automatically. The **Startup Wizard** assists the user with the initial configuration of the **G7 True Torque Control^2 Adjustable Speed Drive**. See the section titled Initial Setup on pg. 38 for additional information on the **Startup Wizard**.

Installation Notes

When a brake-equipped motor is connected to the ASD, it is possible that the brake may not release at startup because of insufficient voltage. To avoid this, **Do Not** connect the brake or the brake contactor to the output of the ASD.

If an output contactor is used for bypass operation, it must be interlocked such that commercial power is never applied to the output terminals of the ASD (**T1/U**, **T2/V**, or **T3/W**).

If a secondary magnetic contactor (MC) is used between the output of the ASD and the motor, it should be interlocked such that the **ST – CC** connection is disconnected before the output contactor is opened.

Do Not open and then close a secondary magnetic contactor between the ASD and the motor unless the ASD is off and the motor is not rotating.

Note: *Re-application of power via a secondary contact while the ASD is on or while the motor is still turning may cause ASD damage.*

On some devices the **ST**-to-**CC** connection is further enhanced by the operation of the **MS1 AUX** relay circuit. The **MS1 AUX** relay circuit is normally open and closes the **ST**-to-**CC** connection (via **ST1**) only after normal system power is available. The **MS1 AUX** relay circuit prohibits the **ST**-to-**CC** connection in the event that the **MS1** contactor fails to close during start up or if **MS1** opens while the ASD is running. For the 230 volt ASD this feature is available on the 30 HP system, on the 460 volt ASD this feature is available on the 75 HP and above systems, and on the 600 volt ASD it is available on the 60 HP and above systems.

Figure 2. ST activation using the MS1 AUX circuit configuration.

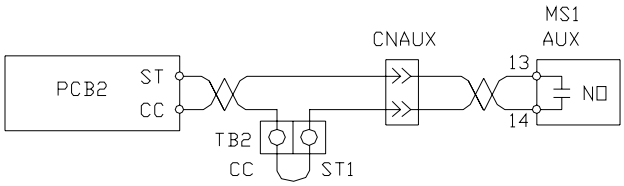

The ASD input voltage should remain within 10% of the specified input voltage range. Input voltages approaching the upper or lower limit settings may require that the overvoltage and undervoltage stall protection level parameters, **F626** and **F629**, be adjusted. Voltages outside of the permissible tolerance should be avoided.

The frequency of the input power should be ±2 Hz of the specified input frequency.

Do not use an ASD with a motor that has a power rating that is higher than the rated output of the ASD.

The ASD is designed to operate NEMA B motors. Consult with your sales representative before using the ASD for special applications such as with an explosion-proof motor or applications with a piston load.

Do Not apply commercial power to the output terminals **T1/U**, **T2/V**, or **T3/W**.

Disconnect the ASD from the motor before megging or applying a bypass voltage to the motor.

Interface problems may occur when an ASD is used in conjunction with some types of process controllers. Signal isolation may be required to prevent controller and/or ASD malfunction (contact your Toshiba sales representative or the process controller manufacturer for additional information about compatibility and signal isolation).

Use caution when setting the output frequency. Over speeding a motor decreases its ability to deliver torque and may result in damage to the motor and/or the driven equipment.

All **G7 ASD**s are equipped with internal DC bus fuses. However, not all **G7 ASD**s are equipped with internal primary power input fuses (HP dependent). When connecting two or more drives that have no internal fuse to the same power line as shown in Figure 3, it will be necessary to select a circuit-breaking configuration that will ensure that if a short circuit occurs in ASD 1, only MCCB2 trips, not MCCB1. If it is not feasible to use this configuration, insert a fuse between MCCB2 and ASD 1.

Figure 3. Circuit breaker configuration.

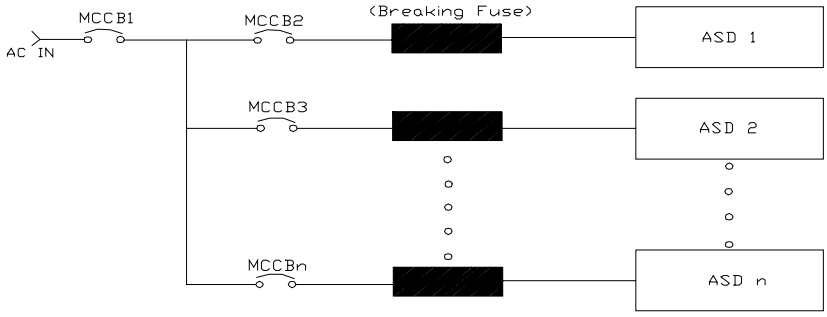

Mounting the ASD

CAUTION

Install the unit securely in a well ventilated area that is out of direct sunlight using the mounting holes on the rear of the ASD.

The ambient temperature rating for the **G7 ASD** is from 14 to 104° F (-10 to 40° C). The process of converting AC to DC, and then back to AC produces heat. During normal ASD operation, up to 5% of the input energy to the ASD may be dissipated as heat. If installing the ASD in a cabinet, ensure that there is adequate ventilation.

Do Not operate the ASD with the enclosure door open.

When installing multiple ASDs, ensure that there is a clearance space of at least 8 inches (20 cm) from the top and the bottom of adjacent units. There should be at least 2 inches (5 cm) on either side of adjacent units. For the models below 50 HP the top and bottom clearance specifications may be reduced to 4 inches (10 cm). This space ensures that adequate ventilation is provided (see the section titled Enclosure Dimensions and Conduit Plate Information on pg. 182 for additional information on mounting space requirements).

Note: *Ensure that the ventilation openings are not obstructed.*

ASDs produce high-frequency noise — steps must be taken during installation to avoid the negative effects of noise. Listed below are some examples of measures that will help to combat noise problems.

- Separate the input and output power conductors of the main circuit. Do not install the input and output wires in the same duct or in parallel with each other, and do not bind them together.
- Do not install the input or output power conductors of the main circuit and the wires of the control circuit in the same duct or in parallel with each other, and do not bind them together.
- Use shielded wires or twisted wires for the control circuits.
- Ensure that the grounding terminals (G/E) of the ASD are securely connected to ground.
- Connect a surge suppressor to every electromagnetic contactor and every relay installed near the ASD.
- Install noise filters as required.

Connecting the ASD

DANGER

Refer to the section titled Installation Precautions on pg. 4 and the section titled Lead Length Specifications on pg. 21 before attempting to connect the ASD and the motor to electrical power.

System Grounding

Proper grounding helps to prevent electrical shock and to reduce electrical noise. The ASD is designed to be grounded in accordance with **Article 250** of the **2002 NEC** or **Section 10/Part One** of the **Canadian Electrical Code** (CEC).

The grounding conductor shall be sized in accordance with **Article 250-122** of the **NEC** or **Part One-Table 6** of the **CEC**.

Note: *The metal of conduit is not an acceptable ground.*

The input, output, and control lines of the system shall be run in separate metal conduits and each shall have its own ground conductor.

Power Connections

DANGER

L1/R, **L2/S**, and **L3/T** are the 3-phase input supply terminals for the ASD. The ASD may be operated from a single-phase supply. When operating using a single-phase supply, use the **L1** and **L3** terminals.

T1/U, **T2/V**, and **T3/W** are the output terminals of the ASD that connect to the motor.

An inductor may be connected across terminals **PA** and **PO** to provide additional filtering. When not used, a jumper is connected across these terminals (see Figure 18 on pg. 30).

Connect the input and output power lines of the ASD as shown in Figure 4.

Note: *In the event that the motor rotates in the wrong direction when powered up, reverse any two of the three ASD output power leads connected to the motor.*

Figure 4. ASD/Motor connection diagram.

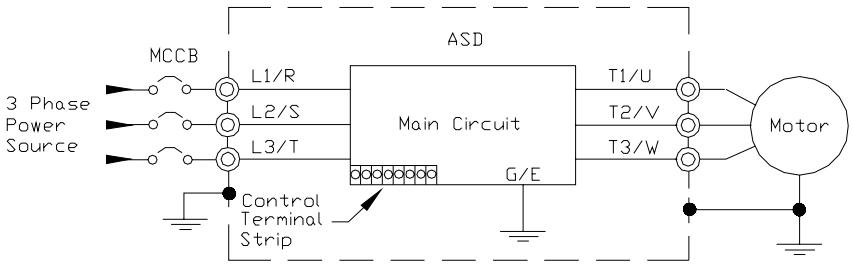

Connect the 3-phase input power to the input terminals of the ASD at **L1/R**, **L2/S**, and **L3/T**. Connect the output of the ASD to the motor from terminals **T1/U**, **T2/V**, and **T3/W**. The input and output conductors and terminal lugs used shall be in accordance with the requirements listed in the section titled Cable/Terminal Specifications on pg. 195.

If multiple conductors are used in parallel for the input or output power and it is necessary to use separate conduits, each parallel set shall have its own conduit and not share its conduit with other parallel sets (i.e., place U1, V1, and W1 in one conduit and U2, V2, and W2 in another) (refer to NEC Article 300.20 and Article 310.4). National and local electrical codes should be referenced if three or more power conductors are run in the same conduit (refer to 2002 NEC Article 310 adjustment factors).

Note: *National and local codes should be referenced when running more than three conductors in the same conduit.*

Install a molded case circuit breaker (MCCB) or fuse between the 3-phase power source and the ASD in accordance with the fault current setting of the ASD and **2002 NEC Article 430**.

CAUTION

For 600 volt ASDs, the 15 HP or less ASDs (P/N VT130G7U6015B – 6160B) require a class-J fuse rated at 600 Volts/30 A.

A phase-shifting transformer (or other means) must be supplied by the user when configured for 12-pulse operation.

External fuses are required on the ASDs listed below when configured for 12-pulse operation.

VT130G7U2600B(DR)
VT130G7U2750B(DR)
VT130G7U412KB(DR)
VT130G7U415KB(DR)
VT130G7U610KB(DR)
VT130G7U612KB(DR)
VT130G7U615KB(DR)

Use either the Ferraz Shawmut Semiconductor fuse (P/N A70QS200) and fuse block P234C, or the Toshiba ASD-FUSEKIT-12P. The Toshiba kit includes the required fuses and the mounting hardware for the fuses.

Lead Length Specifications

Adhere to the NEC and any local codes during the installation of ASD/Motor systems. Excessive lead lengths may adversely effect the performance of the motor. Special cables are not required. Lead lengths from the ASD to the motor in excess of those listed in Table 2 may require filters to be added to the output of the ASD. Table 2 lists the suggested maximum lead lengths for the listed motor voltages.

Table 2.

Model	PWM Carrier Frequency	NEMA MG-1-1998 Section IV Part 31 Compliant Motors[2]
230 Volt	All	1000 feet
460 Volt	< 5 kHz	600 feet
	≥ 5 kHz	300 feet
600 Volt	< 5 kHz	200 feet
	≥ 5 kHz	100 feet

Note: *Contact Toshiba for application assistance when using lead lengths in excess of those listed.*

Exceeding the peak voltage rating or the allowable thermal rise time of the motor insulation will reduce the life expectancy of the motor.

For proper operation, the carrier frequency must be 2.2 kHz or above except when operating in the ***Constant Torque****,* ***Variable Torque****, or the* ***5-Point Setting*** *modes.*

Startup and Test

Perform the following checks before turning on the unit:

- **L1/R**, **L2/S**, and **L3/T** are connected to the 3-phase input power.
- **T1/U**, **T2/V**, and **T3/W** are connected to the motor.
- The 3-phase input voltage is within the specified tolerance.
- There are no shorts and all grounds are secured.

I/O and Control

The ASD can be controlled by several input types and combinations thereof, as well as operate within a wide range of output frequency and voltage levels. This section discusses the ASD control methods and supported I/O functions.

The **Control Terminal Strip** PCB (P/N 48570) supports discrete and analog I/O functions and is shown in Figure 6 on pg. 25. Table 3 lists the names, the default settings, and the descriptions of the input and output terminals of the **Control Terminal Strip PCB**.

Note: *To use the input control lines of the **Control Terminal Strip** the **Command Mode** setting must be set to **Use Control Terminal Strip** (Program ⇒ Fundamental Parameters ⇒ Standard Mode Selection ⇒ Command Mode ⇒ **Use Control Terminal Strip**).*

Figure 18 on pg. 30 shows the basic connection diagram for the G7 system.

Table 3. Control Terminal Strip default assignment terminal names and functions.

Default Term. Setting	Input/Output	Default Function (also see Terminal Descriptions on pg. 23)	Circuit Config.
ST	Discrete Input	**Standby** (jumper to **CC** to operate the unit) — Multifunctional programmable discrete input (see Installation Notes on pg. 17 for further information on this terminal).	Figure 8 on pg. 29.
RES	Discrete Input	**Reset** — Multifunctional programmable discrete input.	
F	Discrete Input	**Forward** — Multifunctional programmable discrete input.	
R	Discrete Input	**Reverse** — Multifunctional programmable discrete input.	
S1	Discrete Input	**Preset Speed 1** — Multifunctional programmable discrete input.	
S2	Discrete Input	**Preset Speed 2** — Multifunctional programmable discrete input.	
S3	Discrete Input	**Preset Speed 3** — Multifunctional programmable discrete input.	
S4	Discrete Input	**Emergency Off** — Multifunctional programmable discrete input.	
RR	Analog Input	**RR** — Multifunction programmable analog input (0.0 to 10 volt input — 0 to 80 Hz output). **Reference CC**.	Figure 9 on pg. 29.
RX	Analog Input	**RX** — Multifunctional programmable analog input (-10 to +10 VDC input — -80 to +80 Hz output). **Reference CC**.	Figure 10 on pg. 29.
II	Analog Input	**II** — Multifunctional programmable analog input (4 [0] to 20 mADC input — 0 to 80 Hz output) (see Figure 6 on pg. 25 for the location of the **II** terminal). **Reference CC**.	Figure 11 on pg. 29.
VI	Analog Input	**VI** — Multifunctional programmable analog input (0 to 10 VDC input — 0 to 80 Hz output). **Reference CC**.	
P24	DC Output	24 VDC @ 50 mA output.	Figure 12 on pg. 29.
PP	DC Output	**PP** — 10.0 VDC voltage source for the external potentiometer.	Figure 13 on pg. 29.
OUT1	Discrete Output	**Low Frequency** — Multifunctional programmable discrete output.	Figure 14 on pg. 29.
OUT2	Discrete Output	**Reach Frequency** — Multifunctional programmable discrete output.	
FP	Output	**Frequency Pulse** — an output pulse train that has a frequency which is based on the output frequency of the ASD.	Figure 15 on pg. 29.
AM	Output	Produces an output current that is proportional to the magnitude of the function assigned to this terminal (see Table 7 on page 61).	Figure 16 on pg. 29
FM	Output		
FLC	Output	Fault relay (common).	Figure 17 on pg. 29.
FLB	Output	Fault relay (N.C.).	
FLA	Output	Fault relay (N.O.).	
CC	—	Control common (**Do Not** connect to **Earth Gnd**).	
Discrete Input Terminals ⇒ Connect to **CC** to activate. **Analog Input Terminals** reference **CC**.			

Terminal Descriptions

Note: *The programmable terminal assignments may be accessed and changed from their default settings as mapped on pg. 47 or via the* ***Direct Access*** *method: Program ⇒ Direct Access ⇒* ***applicable parameter number****. See the section titled Program Mode on pg. 47 for the applicable* ***Direct Access*** *parameter numbers.*

For further information on terminal assignments and default setting changes, see the section titled Output Terminal Functions on pg. 49 and CHANGED FROM DEFAULT on pg. 47.

ST — The default setting for this terminal is **ST**. The function of this input as **ST** is a **Standby** mode controller (system is in **Standby** when on). As the default setting, this terminal must be connected to **CC** for normal operation. If not connected to **CC**, **Off** is displayed on the LCD screen. This input terminal may be programmed to any 1 of the 68 possible functions that are listed in Table 8 on page 76 (see **F113**).

RES — The default setting for this terminal is **RES**. The function of this input as **RES** is a system **Reset**. A momentary connection to **CC** resets the ASD and any fault indications from the display. This input terminal may be programmed to any 1 of the 68 possible functions that are listed in Table 8 on page 76 (see **F114**). **Reset** is effective when faulted only.

F — The default setting for this terminal is **F**. The function of this input as **F** is **Forward Run.** A connection to **CC** runs the motor in the **Forward** direction when it is on. This input terminal may be programmed to any 1 of the 68 possible functions that are listed in Table 8 on page 76 (see **F111**).

R — The default setting for this terminal is **R**. The function of this input as **R** is **Reverse Run.** A connection to **CC** runs the motor in the **Reverse** direction when it is on. This input terminal may be programmed to any 1 of the 68 possible functions that are listed in Table 8 on page 76 (see **F112**).

S1 — The default setting for this terminal is **S1**. The function of this input as **S1** is to run the motor at **Preset Speed #1** (see Preset Speed #1 on pg. 66) when it is on. This input terminal may be programmed to any 1 of the 68 possible functions that are listed in Table 8 on page 76 (see **F115**).

S2 — The default setting for this terminal is **S2**. The function of this input as **S2** is to run the motor at **Preset Speed #2** (see Preset Speed #2 on pg. 66) when it is on. This input terminal may be programmed to any 1 of the 68 possible functions that are listed in Table 8 on page 76 (see **F116**).

S3 — The default setting for this terminal is **S3**. The function of this input as **S3** is to run the motor at **Preset Speed #3** (see Preset Speed #3 on pg. 67) when it is on. This input terminal may be programmed to any 1 of the 68 possible functions that are listed in Table 8 on page 76 (see **F117**).

S4 — The default setting for this terminal is **Emergency Off** (normally closed). The function of this input as **Emergency Off** is to remove power from the output of the ASD and may apply a supplemental braking system using the method selected at **F603**. This input terminal may be programmed to any 1 of the 68 possible functions that are listed in Table 8 on page 76 (see **F118**).

RR — The default function assigned to this terminal is to carry out the **Frequency Mode #1** setting. The **RR** terminal accepts a 0 – 10 VDC input signal that controls the function assigned to this terminal. This input terminal may be programmed to control the speed or torque of the motor. It may also be used to regulate (limit) the speed or torque of the motor. The gain and bias of this terminal may be adjusted for application-specific suitability (see **F210 – F213**).

RX — The **RX** terminal accepts a ±10 VDC input signal that controls the function assigned to this terminal. This input terminal may be programmed to control the speed, torque, or direction of the motor. It may also be used to regulate (limit) the speed or torque of the motor. The gain and bias of this terminal may be adjusted for application-specific suitability (see **F216 – F219**).

II — The function of the **II** input is to receive a 4 – 20 mA input signal that controls a 0 – 80 Hz output. This input terminal may be programmed to control the speed or torque of the motor and may not be used when using the **VI** input. Also, the gain and bias of this terminal may be adjusted (see **F201 – F204**).

VI — The function of the **VI** input terminal is to receive a 0 – 10 VDC input signal that controls a 0 – 80 Hz output. This input terminal may be programmed to control the speed or torque of the motor and may not be used when using the **II** input. Also, the gain and bias of this terminal may be adjusted (see **F201 – F204**).

P24 — +24 VDC @ 50 mA power supply for customer use.

PP — The function of output **PP** is to provide a 10 VDC output that may be divided using a potentiometer. The tapped voltage is applied to the **RR** input to provide manual control of the **RR** programmed function.

OUT1 — The default setting for this output terminal is the **Output Low Speed** indicator. This output terminal may be programmed to provide an indication that 1 of 60 possible events has taken place. This function may be used to signal external equipment or to activate the brake (see **F130**). The **OUT1** contact is rated at 2A/250 VAC.

OUT2 — The default setting for this output terminal is the **ACC/DEC Complete** indicator. This output terminal may be programmed to provide an indication that 1 of 60 possible events has taken place. This function may be used to signal external equipment or to activate the brake (see **F131**). The **OUT2** contact is rated at 2A/250 VAC.

FP — The default function of this output terminal is to output a series of pulses at a rate that is a function of the output frequency of the ASD. As the output frequency of the ASD goes up so does the **FP** output pulse rate. This terminal may be programmed to provide output pulses at a rate that is a function of the output frequency or the magnitude of any 1 of the 31 the functions listed in Table 7 on pg. 61 (see **F676**).

AM — This output terminal produces an output current that is proportional to the output frequency of the ASD or of the magnitude of the function assigned to this terminal. The available assignments for this output terminal are listed in Table 7 on page 61. For further information on this terminal see F670 on pg. 163.

FM — This output terminal produces an output current that is proportional to the output frequency of the ASD or of the magnitude of the function assigned to this terminal. The available assignments for this output terminal are listed in Table 7 on page 61. For further information on this terminal see F005 on pg. 60.

FLC — **FLC** is the middle leg of a single-pole double-throw (relay) switch. This **FLC** contact of the relay is switched between **FLB** and **FLA**. This contact may be programmed to switch between **FLB** and **FLA** as a function of any 1 of the 60 conditions listed in Table 9 on page 81 (see **F132** and Figure 5 on pg. 24).

FLB — One of two contacts that, under user-defined conditions, connect to **FLC** (see Figure 5 on pg. 24).

FLA — One of two contacts that, under user-defined conditions, connect to **FLC** (see Figure 5 on pg. 24).

Note: *The **FLA** and **FLC** contacts are rated at 2A/250 VAC. The **FLB** contact is rated at 1A/ 250 VAC.*

CC — Control common (**Do Not** connect to **Earth Gnd**).

Figure 5. FLA, FLB, and FLC switching contacts shown in the de-energized state.

Note: *The relay is shown in the **Faulted** or de-energized condition. During normal system operation the relay connection is **FLC**-to-**FLA**.*

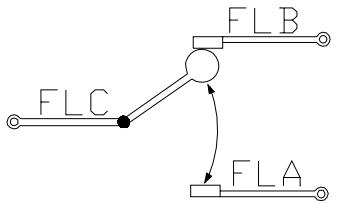

Figure 6. Control Terminal Strip PCB.

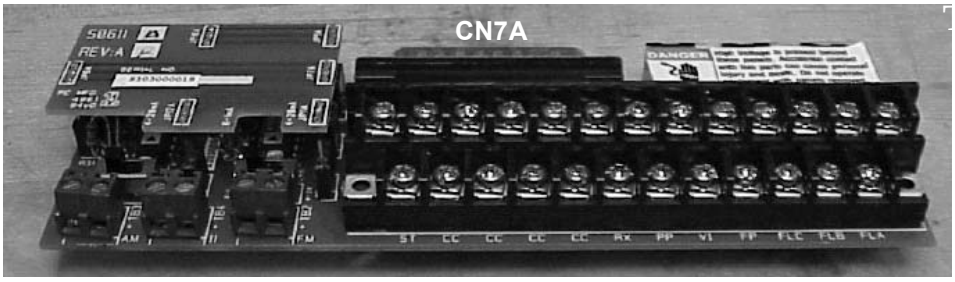

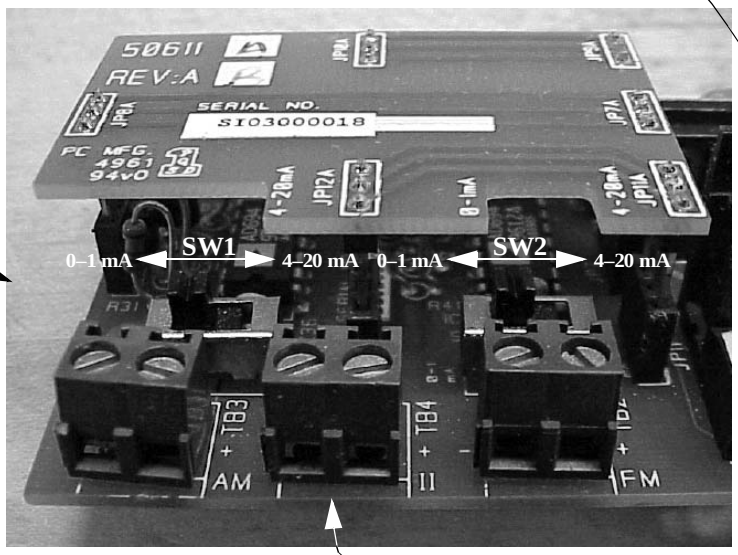

SW1 and **SW2** may be switched to change the full-scale reading of the **AM** and **FM** output terminals. See **F670** and **F005** for further information on the **AM** and **FM** terminal adjustments.

II Terminals

The input and output terminals of the **Control Terminal Strip**. For further information on these terminals see pg. 22.

G7 ASD Control

The Control PCB (P/N 56000) serves as the primary control source for the G7 ASD and receives input from the Control Terminal Strip PCB (see Figure 6 on pg. 25), an Option Card, RS232/RS485 Communications, or the EOI.

The Control PCB has been enhanced to support two new functions: Multiple Protocol Communications and the ability to communicate in either half- or full-duplex modes.

Using the optional multiple-protocol communications interface; the ASD-NANOCOM, the Control PCB may be configured for the type of communications protocol being received and respond appropriately to the sending device. The ASD-NANOCOM connects to the J4 and J5 connectors (see Figure 7). A jumper PCB (P/N 55365) is required at the J4 connector if not using the ASD-NANOCOM.

The ASD-NANOCOM must be setup to support the desired communications protocol via Program ⇒ Communication Setting Parameters ⇒ **Communication Settings**. Consult the ASD-NANOCOM User's Manual (P/N 10572-1.000-000) for a complete listing of the setup requirements.

Half or Full duplex communications is available when using RS232/RS485 communications. The jumpers at the JP1 and the JP2 connectors may be moved from one position to the other to facilitate either half- or full-duplex operation. If no jumpers are used the system will operate in the full duplex mode.

For more information on the G7 ASD communication requirements, please visit WWW.TIC.TOSHIBA.COM to acquire a copy of the 7-Series Communications User Manual and WWW.ICCDESIGNS.COM to acquire a copy of the ASD-NANOCOM User Manual.

Contact your Toshiba representative if more information is required on the ASD-NANOCOM.

Figure 7. Control Board of the **G7 ASD** (P/N 56000).

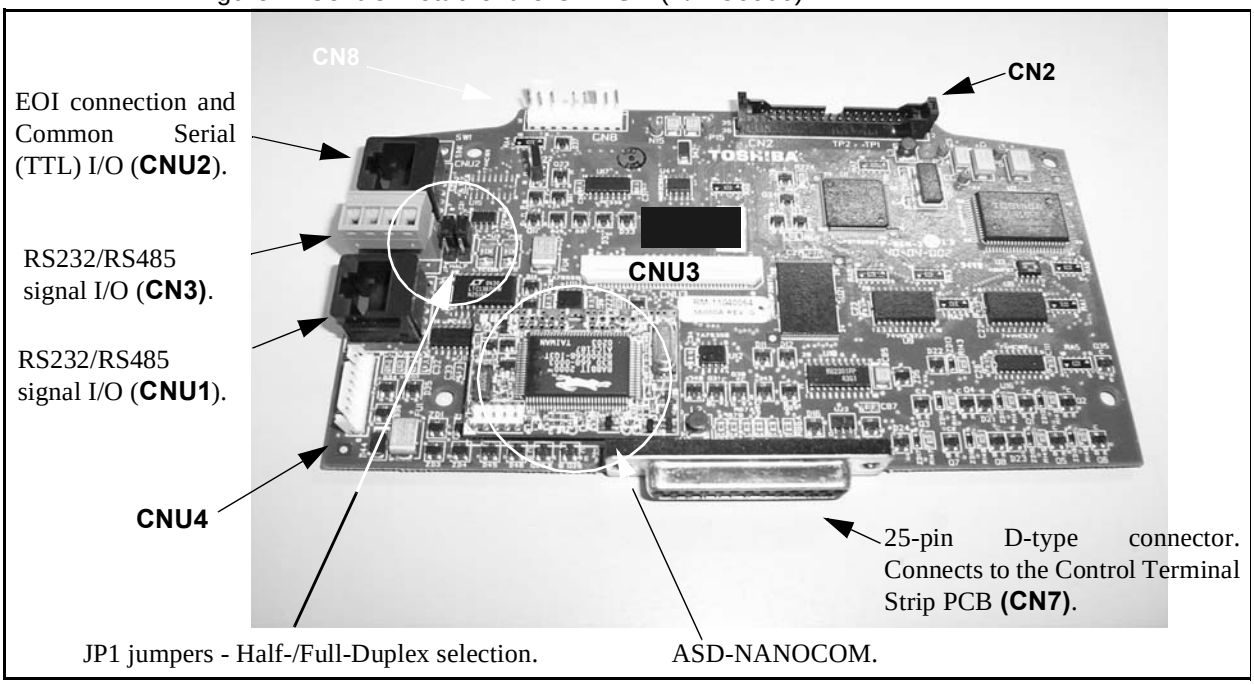

CNU1/1A and CNU2/2A Pinout

Pin #	CNU1 Pinout (Controller PCB)	CNU1A Pinout (EOI)	Pin #	CNU2 Pinout (Controller PCB)	CNU2A Pinout (EOI)
1	P24	P24	1	P24	P24
2	Gnd	Gnd	2	Gnd	Gnd
3	Tx (-)	RXA	3	Rx	Tx
4	Rx (+)	TXA	4	Gnd	Gnd
5	Rx (-)	TXB	5	Tx	Rx
6	Tx (+)	RXB	6	Gnd	Gnd
7	$\overline{\text{RS232}}$/RS485	CNU3 Pin-7	7	Open	Open
8	Gnd	Gnd	8	Gnd	Gnd

Note: *For normal operation, connect CNU1 to CNU1A or CNU2 to CNU2A.* ***DO NOT*** *connect both. If both are connected, the TTL and RS232/RS485 signals will be transferred simultaneously to and from the EOI and the control board resulting in a* ***Communications Lost*** *error message or erratic ASD operation.*

Note: *Connecting CNU1 to CNU2A will result in a continuous splash screen display. Connect CNU1 to CNU1A and continue normally.*

Connecting CNU2 to CNU1A will result in a continuous splash screen display. Connect CNU2 to CNU2A and continue normally.

Note: *See the 7-Series Communications Manual (P/N 53840) for further information on the G7 communications protocol and system configuration requirements.*

CN3 Pinout

CN3 is used for RS232/RS485 serial communications.

Pin Number	CNU3 Pinout (Controller PCB)
1	RS232/RS485 Signal +
2	RS232/RS485 Signal -
3	RS232/RS485 Signal Gnd
4	Shield

CN7 Pinout

Listed below is the pinout of the **CN7** connector. The **CN7** connector is the 25-pin D-type connector of the **Control Board** (see Figure 7).

Table 4. CN7 pinout assignments. Listed are the default settings for programmable terminals.

Pin Number	CN7 PInout	Pin Number	CN7 PInout
1	PP	14	II
2	FL	15	S1
3	VI	16	R
4	RR	17	S3
5	FM	18	S2
6	RX	19	N15
7	FP	20	S4
8	AM	21	P15
9	*OUT1	22	P24
10	*OUT2	23	CC
11	ST	24	CC
12	RES	25	CC
13	F	—	—
Note: ** Open collector outputs.*			

I/O Circuit Configurations

Figure 8. Discrete input.

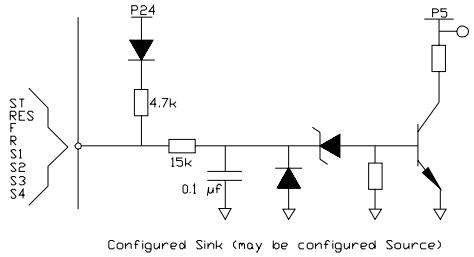

Figure 9 RR input.

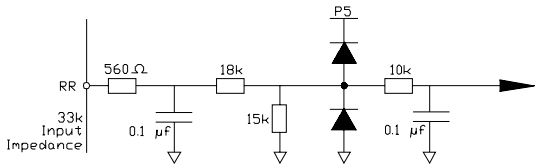

Figure 10. RX input.

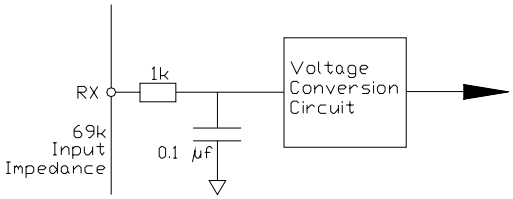

Figure 11. VI/II input.

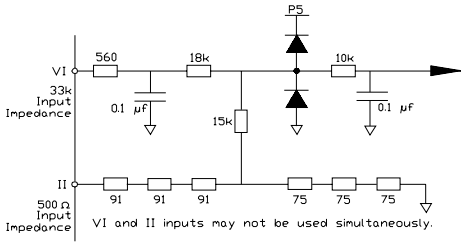

Figure 12. P24 Output.

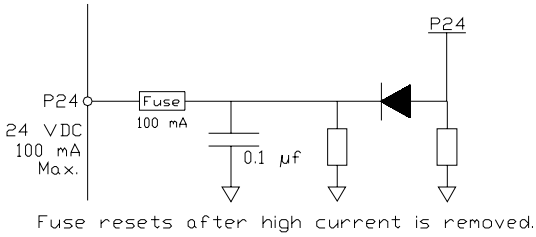

Figure 13. PP Output.

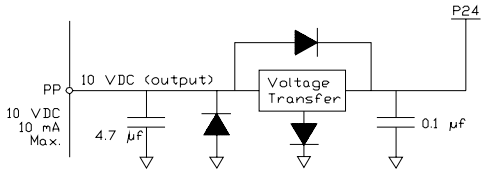

Figure 14. OUT1/OUT2 Output.

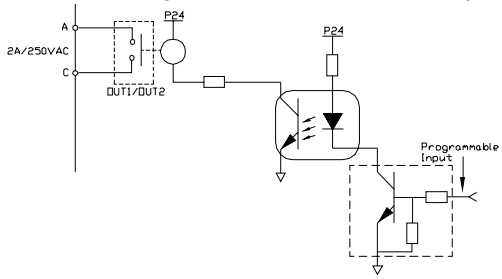

Figure 15. FP Output.

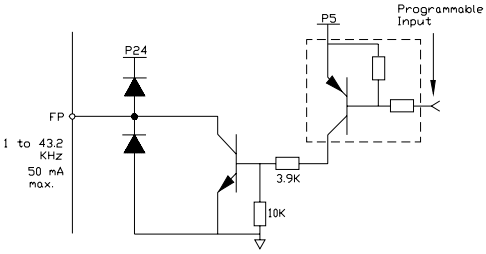

Figure 16. AM/FM Output.

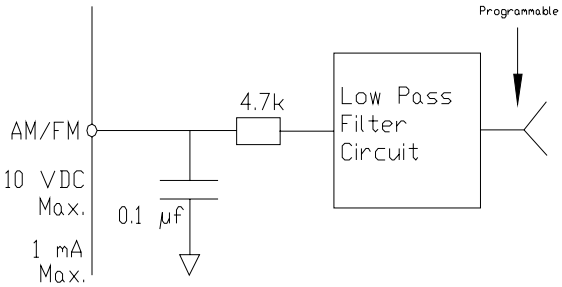

Figure 17. Fault Relay (during fault).

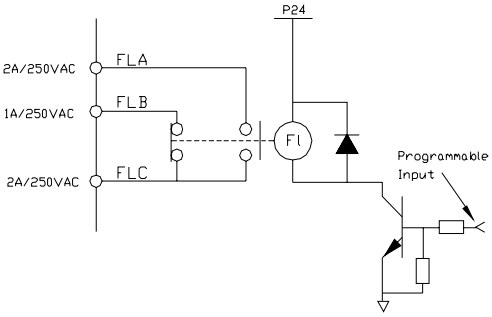

Typical Connection Diagram

Figure 18. G7 typical connection diagram.

Note: *When connecting multiple wires to the PA, PB, PC, or PO terminals, do not connect a solid wire and a stranded wire to the same terminal.*

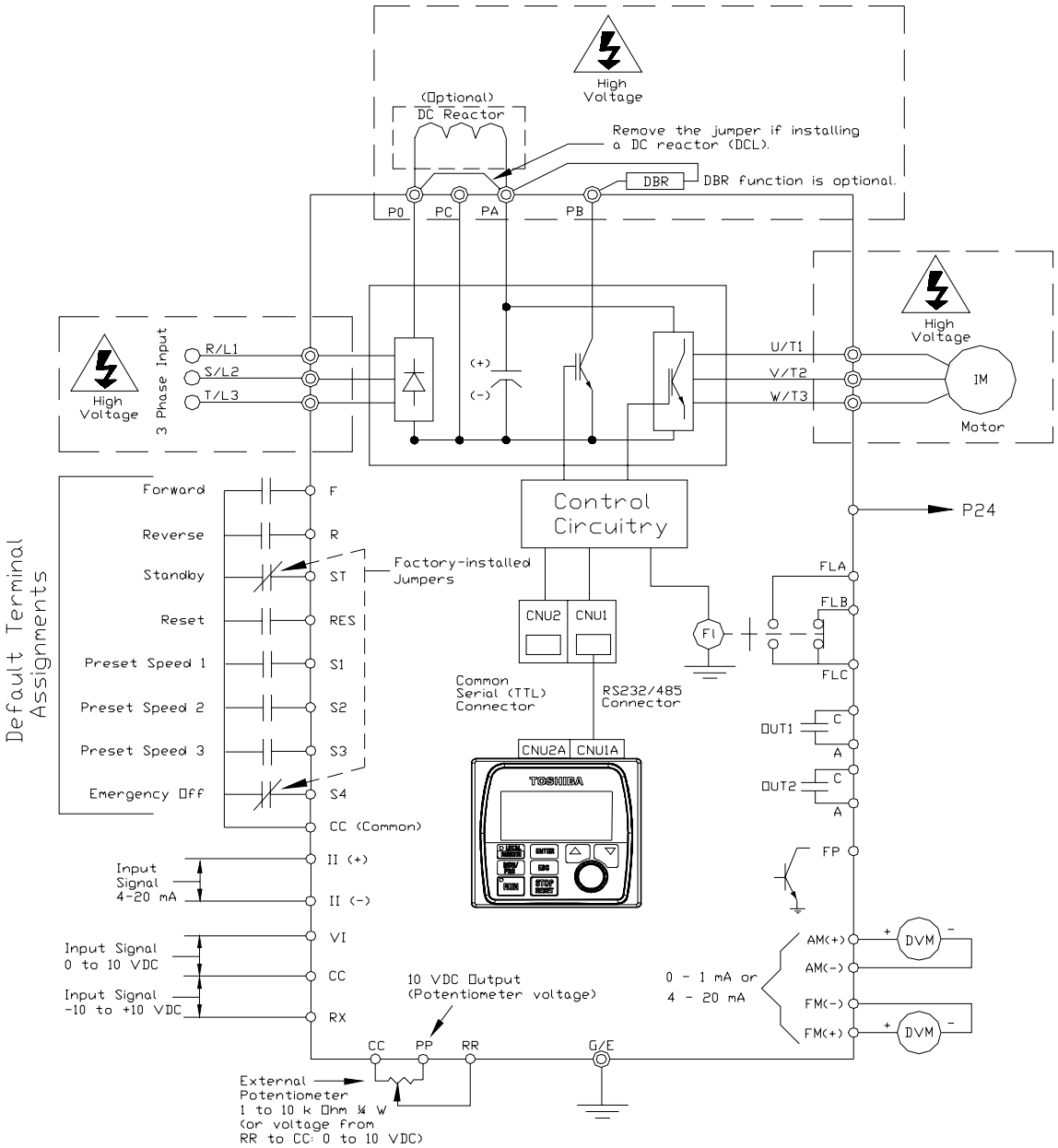

Note: *The **AM**, **FM**, **VI**, and **II** analog terminals are referenced to **CC**.*

Note: *See alternative **ST**-to-**CC** activation configuration on pg. 17.*

Command Mode and Frequency Mode Control

Command control includes instructions such as **Stop**, **Run**, **Jog**, etc. The source of the **Command** signal must be established for normal operation.

Frequency commands control the output speed of the ASD. The source of the frequency (speed) control signal must be established for normal operation.

The source of the command control and speed control may be either internal or external. Once the source signal is selected for either function, the system may be configured to use the selected signal all of the time or switch under user-defined conditions.

Command and **Frequency** control may be carried out using any one of several control methods (signal sources) or combinations thereof. In the event that multiple control commands are received, the signal sources are assigned priority levels. The primary control method for **Command** and **Frequency** control uses the settings of **F003** and **F004**, respectively.

Command Control (F003)

The **Command Mode** selection of **F003** establishes the primary source of the command input for the ASD. However, the **Override** feature may supersede the **F003** setting as indicated in Table 5.

Standard Mode Settings
Command Mode:
Use Control Terminal Strip
Frequency Mode #1:
Use RR
Frequency Mode #2:

Table 5 shows the hierarchy of the control sources managed by the **Override** function. The level of the control item on the hierarchy is listed from left to right, most to least, respectively. As indicated in the table, the **Override** setting may supersede the **F003** setting.

Placing the EOI in the **Local** mode selects either the **RS232/RS485** or the **Common Serial (TTL)** as the **Command Mode** control source. Once in the **Local** mode, the **LCD Port Connection** setting determines if the **RS232/RS485** or the **Common Serial (TTL)** will be used for **Command** control. **Local** mode operation may be superseded by other **Communications Override** settings.

Example: With the EOI set to **Local** and the **LCD Port Connection** set to **Common Serial (TTL)**, setting the **Communication Card** or **RS232/RS485** control to **Override** will supersede the **Common Serial (TTL)** setting.

The remaining control sources may be placed into the override mode using communications.

The source of the **Command** control signal may be selected by:

- The **F003** setting,
- Placing an item from the list below in the **Override** mode via communications, or
- Placing the EOI in the **Local** mode (places only the RS232/RS485 or the Common Serial [TTL] in the Override mode).

Possible **Command** signal source selections include the following:

- Use Control Terminal Strip (default),
- Use LED Keypad Option,
- Use Common Serial (TTL),
- Use RS232/RS485,

- Use Communication Card, or
- **F003** setting (is used if no signal sources are in the Override mode).

Note: *The **Control Terminal Strip** is placed in the **Override** mode by assigning a discrete terminal to **Command Control Terminal Strip Priority** and connecting the terminal to **CC**. Once activated (Run command required), the **Control Terminal Strip** settings will be used for **Override Command** control (F, R, Preset Speeds, etc.).*

Frequency Control (F004)

The **Frequency Mode #1** (or the **Frequency Mode #2**) setting establishes the user-selected source of the frequency-control input for the ASD. The signal source selected here is used for speed control unless the **Reference Priority Selection** parameter is configured to automatically switch this setting (see **F200**) or if the **Override** feature is enabled (via communications or via the Local mode operation).

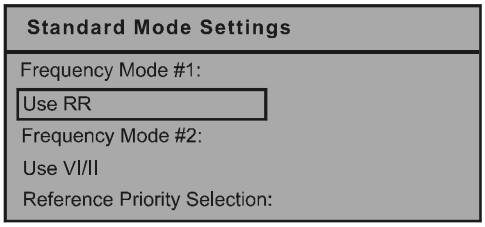

Table 5 shows the hierarchy of the control sources managed by the **Override** function. The level of the control item on the hierarchy is listed from left to right, most to least, respectively. As indicated in the table, the **Override** setting may supersede the selection at **F004**.

Placing the EOI in the **Local** mode selects either the **RS232/RS485** or the **Common Serial (TTL)** as the **Frequency Mode #1** control source. Once in the **Local** mode, the **LCD Port Connection** setting determines if the **RS232/RS485** or the **Common Serial (TTL)** will be used for **Frequency Mode #1** control. **Local** mode operation may be superseded by other **Communications Override** settings.

Example: With the EOI set to **Local** and the **LCD Port Connection** set to **Common Serial (TTL)**, setting the **Communication Card** or **RS232/RS485** control to **Override** will supersede the **Common Serial (TTL)** setting.

The remaining control sources may be placed into the override mode using communications.

The source of the **Frequency** control signal may be selected by:

- The **F004** setting,
- Placing an item from the list below in the **Override** mode via communications, or
- Placing the EOI in the **Local** mode (places only the RS232/RS485 or Common Serial in the Override mode).

Possible **Frequency** control source selections include the following:

- Communication Card,
- RS232/RS485,
- Common Serial (TTL),
- LED Keypad,
- Control Terminal Strip (default setting), or
- **F004** setting (used if no other items are in the Override mode).

Note: *The **Control Terminal Strip** is placed in the **Override** mode by assigning a discrete terminal to **VI/II Terminal Priority** and connecting the terminal to **CC**. Once the discrete terminal is activated, **VI/II** is used as the **Control Terminal Strip Override** control item.*

Command and Frequency Control Selections

The user may select only one **Command** source and only one source for **Frequency** control. The default settings for **Command** and **Frequency** control are **Use Control Terminal Strip** and **Use RR**, respectively.

The **G7 ASD** has a command register for each item listed as a **Command** or **Frequency** source. The registers store the **Override** setting for each control source. The registers are continuously scanned to determine if any of the listed items are in the **Override** mode.

For each scan cycle, the command registers of the control sources are scanned for the **Override** setting in the order that they are listed in Table 5. The first item of the **Command** section and the first item of the **Frequency** section detected as being in the **Override** mode will be used for **Command** and **Frequency** control, respectively. If no items are detected as being in the **Override** mode, the settings of **F003** and **F004** will be used for **Command** and **Frequency** control, respectively.

Any or all of the **Command** and **Frequency** control input sources may be placed in the **Override** mode.

Placing the **G7 ASD** in the **Local** mode (Local/Remote LED on) via the EOI places the **RS232/RS485** or the **Common Serial** (TTL) control selections in the **Override** mode for **Command** and **Frequency** input (see the section titled Override Operation below for the proper setting). The **Local/Remote** control **Override** feature for **Command** and **Frequency** (or either) may be enabled/disabled at Program ⇒ EOI Option Setups ⇒ **Local-Remote Key** (enabled with check in box).

Communications may be used to place the remaining **Command** and eligible **Frequency** control input sources in the **Override** mode. Once placed in the **Override** mode this setting is valid until it is cancelled, the power supply is turned off, or the unit is reset.

Override Operation

The command registers of the listed signal sources are scanned in the order that they are listed in Table 5 to determine which input sources are in the **Override** mode. During each register scan cycle, the first item detected as having the **Override** function turned on is the selection that is used for **Command** or **Frequency** control input.

The **Override** control setting supersedes the setting of the **Command** mode setting (**F003**) and the **Frequency** mode setting (**F004**). However, the **F003** and **F004** settings will be used in the event that the register scan returns the condition that none of the listed items have the **Override** feature turned on (see Table 5).

Command and Frequency-Control Override Hierarchy

Table 5 lists the input conditions and the resulting output control source selections for Command and Frequency control Override operation. The G7 ASD reads the command registers of the listed control items from the left to the right. In the table the number 1 indicates that the Override feature is turned on for that control input source; X = Don't are; and 0 = Override Off.

The first item to be read that has the Override feature turned on will be used for Command or Frequency control.

Table 5. **Command** and **Frequency** control hierarchy.

1	2	3	4	5	6	Priority Level
Communication Card	**RS232/ RS485**	**Common Serial**	**Panel** (LED Keypad)	**Control Terminal** (Binary/BCD Input)	**F003/F004**	**Command/ Frequency Mode**
1	X	X	X	X	X	Communication Card
0	**1**	X	X	X	X	RS232/RS485
0	0	**1**	X	X	X	Common Serial
0	0	0	**1**	X	X	Panel (LED Keypad)
0	0	0	0	**1**	X	Control Terminal
0	0	0	0	0	**F003/F004 Setting**	F003/F004 Setting

Command Control Selections

The following is a listing and description of the **Command Mode** (**F003**) selections (Program ⇒ Fundamental Parameters ⇒ Standard Mode Selection ⇒ **Command Mode**).

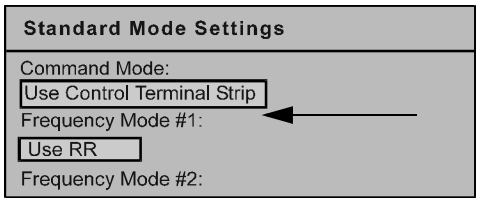

Settings:

Use Control Terminal Strip

Allows for **Command** control input via the 25-pin terminal strip on the **Control Terminal Strip** PCB.

Use LED Keypad Option

The **LED Keypad** is unavailable at the time of this release.

Use Common (TTL)

Set the **LCD Port Connection** to **Common Serial (TTL)** to use this feature.

Use RS232/RS485

Set the **LCD Port Connection** to **RS232/RS485** to use this feature.

Use Communication Card

Routes the control and monitoring I/O to CNU3 of the **Control Board** of the **G7 ASD** (Communication Card connector).

Frequency Control Selections

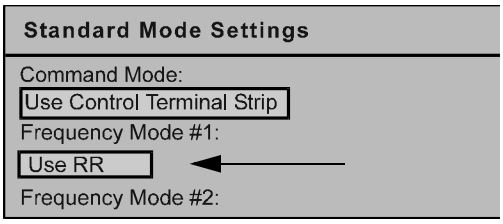

The following is a listing and description of the **Frequency Mode** (**F003**) selections (Program ⇒ Fundamental Parameters ⇒ Standard Mode Selection ⇒ **Frequency Mode #1**).

Settings:

Use VI/II

0 to 10-volt DC analog input connected to **VI** or a 4 – 20 mA (or 0 to 1 mA) DC current connected to **II** (cannot use both simultaneously).

Use RR

0 to 10-volt DC analog input connected to **RR**.

Use RX

-10 to +10-volt DC analog input connected to **RX**.

Use Option Card RX2

-10 to +10-volt DC analog input connected to **RX2**.

Use LED Keypad Option

The LED Keypad is unavailable at the time of this release.

Use Binary/BCD Input

Allows for discrete terminal input to control the ASD output.

Use Common Serial (TTL)

To use the EOI for control requires that the **LCD Port Connection** be set to **Common Serial (TTL)** to use this feature.

Use RS232/RS485

To use the EOI for control requires that the **LCD Port Connection** be set to **RS232/RS485** to use this feature.

Use Communication Card

Routes the control and monitoring I/O to CNU3 of the **Control Board** of the **G7 ASD** (Option Card connector).

Use Motorized Pot Simulation

A discrete terminal may be configured to increase or decrease the speed of the motor by momentarily connecting the assigned terminal to **CC**. See Table 8 on page 76 for further information on this feature.

Use Pulse Input Option

Configures the system to receive pulse input. See **PG Speed Reference Setpoint** on pg. 103 for further information on this feature.

Electronic Operator Interface

The G7 **Electronic Operator Interface** (EOI) is comprised of an LCD display, two LEDs, a rotary encoder, and eight keys. These items are described below and their locations are provided in Figure 19 on pg. 37.

The **EOI** can be mounted remotely from the ASD as described in the section titled EOI Remote Mounting on pg. 190. The dimensional requirements for remote mounting may also be found in this section. Using a screw length that exceeds the specified dimensions may cause deformation of the outer surface of the bezel as shown in Figure 31 on pg. 192 and should be avoided.

The interface can operate up to distances of 15 feet from the ASD via the Common Serial (TTL) Port. For distances beyond 15 feet, the RS232/RS485 port is recommended.

EOI Features

LCD Display — Displays configuration information, performance data (e.g., motor frequency, bus voltage, torque, etc.), and diagnostic information.

Local|Remote Key — Toggles the system to and from the **Local** and **Remote** modes. The LED is on when the system is in the **Local Command** mode. The **Local** mode allows the **Command** and **Frequency** control functions to be carried out via the **EOI**.

The **Remote** mode enables the **Command** and **Frequency** control functions to be carried out via the **Control Terminal Strip**, **LED Keypad**, **RS232/RS485**, **Communication Card**, or **Pulse Input**. The selection may be made via Program ⇒ Fundamental Parameters ⇒ Standard Mode Settings ⇒ **Command Mode**.

Note: *The **LED Keypad** is under development and is unavailable at the time of the release of this manual.*

The availability of the **Local** mode of operation (**Command** and **Frequency** control) may be disabled via Program ⇒ EOI Option Setups ⇒ **Local/Remote Key**. The availability of the **Local** mode of operation may be reinstated by changing this setting or performing a **Reset** (see **F007**).

Enter Key — Selects a menu item to be changed or accepts and records the changed data of the selected field (same as pressing the **Rotary Encoder**).

Esc Key — Returns to the previous level of the menu tree, toggles between the **Panel** and the **Frequency Command** screens, or cancels changes made to a field if pressed while still in the reverse video mode (dark background/light text). The 3 functions are menu-specific.

Run Key — Issues the **Run** command while in the **Local** mode.

Run Key Status LED — Illuminates green while stopped or red while running.

Stop Key — Issues the **Off** command (decelerates to **Stop** at the programmed rate) if pressed once while in the **Local** mode or initiates an **Emergency Off** (terminates the ASD output and applies the brake if so configured) if pressed twice quickly from the **Local** or **Remote** modes.

Up Key — Increases the value of the selected parameter or scrolls up the menu listing (continues during press-and-hold).

Down Key — Decreases the value of the selected parameter or scrolls down the menu listing (continues during press-and-hold).

Rotary Encoder — Functions as the **Up** key, the **Down** key, and the **Enter** key. Turn the **Rotary Encoder** either clockwise or counterclockwise to perform the **Up** or **Down** key functions. Press the **Rotary Encoder** to perform the **Enter** function. Simultaneously pressing and turning the **Rotary Encoder** performs a user-defined function (see Program ⇒ EOI Option Setup ⇒ Preferences ⇒ **Encoder Action**).

MON/PRG (Monitor/Program) — Provides a means to access the three root menus. Pressing the **MON/PRG** key repeatedly loops the system through the three root menus (see Figure 21 on pg. 43). While looping through the root menus, the **Program** menu will display the last menu screen or sub-menu item being accessed at the time that the **MON/PRG** key was pressed.

Figure 19. The G7 Electronic Operator Interface.

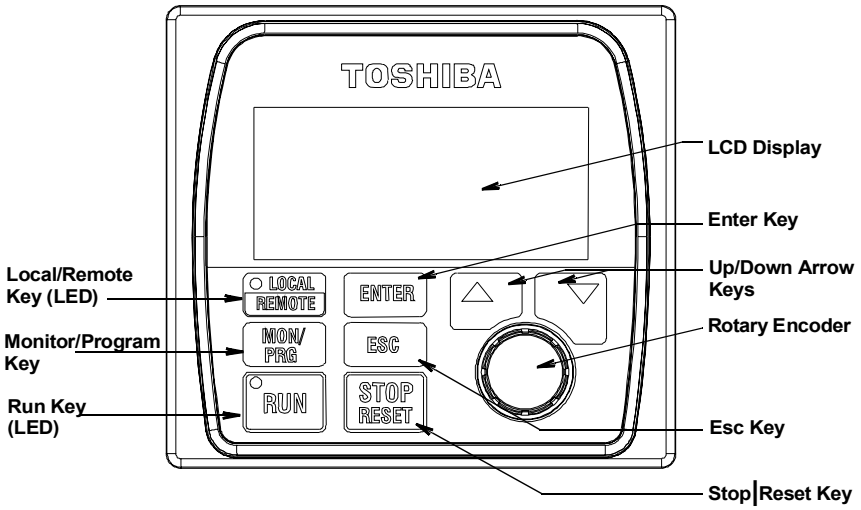

EOI Operation

The **EOI** is the primary input/output device for the user. The **EOI** may be used to monitor system functions, input data into the system, or perform diagnostics.

Note: *The **Up/Down** arrow keys and the **Enter** key may be used to perform the functions of the **Rotary Encoder**. The **Rotary Encoder** will be used in this explanation and throughout this manual for the **Up**, **Down**, and **Enter** key functions.*

The software used with the G7 is menu driven; thus, making it a select and click environment. The operating parameters of a motor may be selected and viewed or changed using the **EOI**.

To change a parameter setting, go to the **Program** mode by pressing the **MON/PRG** key until the **Program** menu is displayed. Turn the **Rotary Encoder** until the desired parameter group is within the cursor block. Press the **Rotary Encoder** (repeat if there is a submenu).

The selection will take on the reverse video format (dark background/light text). Turn the **Rotary Encoder** to change the value of the parameter. Press the **Esc** key while the display is in the reverse video mode to exit the menu without saving the change or press the **Rotary Encoder** to accept the new setting.

Repeated **Esc** key entries takes the menu back one level each time the **Esc** key is pressed until the root level is reached. After reaching the root level, continued **Esc** entries will toggle the system to and from the **Frequency Command** screen and the **Panel** menu.

Note: ***Panel** menu changes entered here will affect EOI-controlled ASD operation only. LED Keypad-controlled functions will not be affected. LED Keypad-controlled operation settings may be viewed or changed at **F008**. See the section titled Panel Menu on pg. 44 for further information on **Panel Menu** operations.*

System Operation

Initial Setup

Upon initial system powerup, the **Startup Wizard** starts automatically. The **Startup Wizard** assists the user with the initial configuration of the input power settings and the output parameters of the **G7 ASD**. The ASD may also be setup by directly accessing each of the individual parameters (see the section titled Direct Access Parameter Information on pg. 59).

The **Startup Wizard** may also be selected and run from the **Program** menu after the initial startup if required.

The **Startup Wizard** querys the user for the following information:

1. **Run now?** (if selected continue on to step #2)/**Run next time at power up?** (if selected go to Program Mode)/**Manually configure?** (if selected go to Finish ⇒ Program Mode).
2. The **Voltage** and **Frequency** rating of the motor.
3. The **Upper Limit** frequency.
4. The **Lower Limit** frequency.
5. Adjust **Accel/Decel** times automatically? (if **Yes**, continue from step #8).
6. The **Acceleration** time.
7. The **Deceleration** Time.
8. The **Volts/Hertz** setting.
9. The motor **Current** rating.
10. The **Command** source.
11. The **Frequency Reference** source.

See the section titled Startup Wizard Requirements on pg. 40 for additional information on the **Startup Wizard**.

Operation (Local)

Note: *See **F003** for information on **Remote** operation.*

To turn the motor on, perform the following:

1. Press the **MON/PRG** key until the **Frequency Command** screen is displayed.
2. Press the **Local|Remote** key to enter the **Local** mode (green **Local** LED illuminates).
3. Turn the **Rotary Encoder** clockwise until the **Frequency Command** value is at the desired setting.
4. Press the **Run** key and the motor runs at the **Frequency Command** value.

Frequency Command Screen

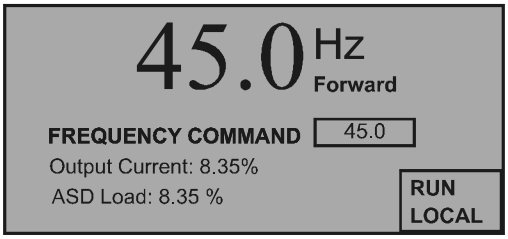

Note: *The speed of the motor may be changed while the motor is running by using the **Rotary Encoder** to change the **Frequency Command** value.*

5. Press the **Stop|Reset** key to stop the motor.

Default Setting Changes

To change a default parameter setting, go to the root of the **Program** menu and turn the **Rotary Encoder** until the desired parameter group is within the cursor block and press the **Rotary Encoder** (repeat if there is a submenu).

Press the **Rotary Encoder** to select the default setting to be changed and the selection takes on the reverse video format (dark background, light text). Turn the **Rotary Encoder** to change the value of the parameter. Press the **ESC** key before accepting the change to exit the menu without saving the change or press the **Rotary Encoder** to accept the new setting.

For a complete listing of the **Program** mode menu options, see the section titled Program Mode on pg. 47. Menu items are listed and mapped for convenience. The **Direct Access Numbers** are listed where applicable.

The default settings may also be changed by entering the **Parameter Number** of the setting to be changed at the **Direct Access** menu (Program ⇒ Direct Access ⇒ ***Applicable Parameter Number***). A listing of the **Direct Access Numbers** and a description of the associated parameter may be found in the section titled Direct Access Parameter Information on pg. 59.

A listing of all parameters that have been changed from the default setting may be viewed sequentially by accessing the **Changed From Default** screen (Program ⇒ **Changed From Default**).

Note: *Parameter **F201** was changed to create the example shown in Figure 20.*

The **Changed From Default** feature allows the user to view (or change) the parameters that are different from the default or the post-reset settings. Once the **Changed From Default** screen is displayed, the system automatically scrolls through all of the system parameters and halts once reaching a changed parameter.

The **Rotary Encoder** may be clicked once clockwise to continue scrolling forward or clicked once counterclockwise to begin scrolling in reverse. With each click of the **Rotary Encoder** from a stop, the system scrolls through all of the parameters and stops at the next parameter that has been changed.

Pressing the **Rotary Encoder** while a changed parameter is displayed accesses the settings of the changed parameter for viewing or changing.

Pressing **ESC** while the system is performing a **Changed From Default** search terminates the search. Pressing **ESC** when done searching (or halted at a changed parameter) returns the system to the **Program** menu.

Figure 20. Changed From Default screen.

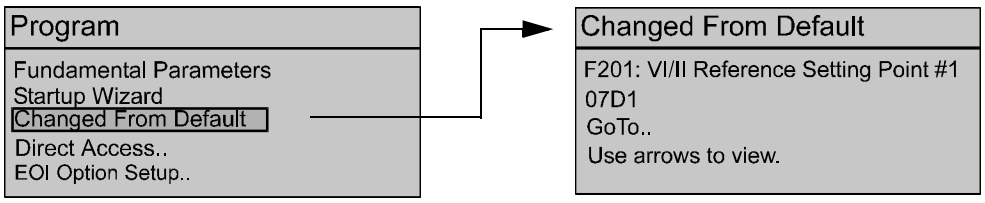

Startup Wizard Requirements

The **Startup Wizard** queries the user for information on the input and output signal parameters of the ASD. The ASD may also be setup by directly accessing each of the control settings via the **Program** menu or the **Direct Access Numbers** (see the section titled Direct Access Parameter Information on pg. 59).

Upon initial system powerup, the **Startup Wizard** starts automatically. It may also be run from the **Program** menu after startup if required. The user is queried to either (**1**) run the **Startup Wizard** (**Run Now**), (**2**) run the **Startup Wizard** at the next power up, or **(3)** perform a manual setting of user-selected parameters.

If selection (**2**) is chosen, the system returns to the **Program** menu and defaults to the **Startup Wizard** on the next power up. If selection (**3**) is chosen, click the subsequent **Finish** box and the system returns to the **Frequency Command** screen. If selection (**1**) (**Run Now**) is selected, the **Startup Wizard** will start and assist the user with the configuration of the **G7 True Torque Control^2 Adjustable Speed Drive** using the following user-input screens.

Voltage and Frequency Rating of the Motor

Motors are designed and manufactured for a specific voltage and frequency range. The voltage and frequency specifications for a given motor may be found on the nameplate of the motor.

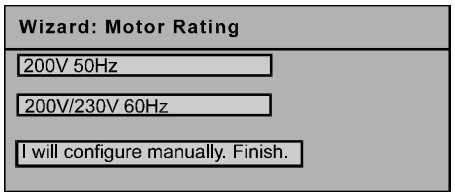

Upper Limit Frequency

This parameter sets the highest frequency that the G7 will accept as a frequency command or frequency setpoint. The G7 may output frequencies higher than the **Upper Limit Frequency** (but, lower than the **Maximum Frequency**) when operating in the **PID Control** mode, **Torque Control** mode, or the **Vector Control** modes (sensorless or feedback).

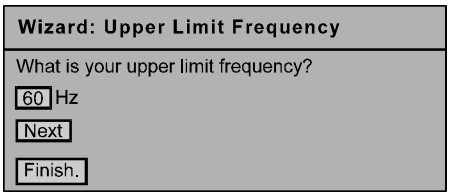

Lower Limit Frequency

This parameter sets the lowest frequency that the G7 will accept as a frequency command or frequency setpoint. The G7 will output frequencies lower than the **Lower Limit Frequency** when accelerating to the lower limit or decelerating to a stop. Frequencies below the **Lower Limit** may be output when operating in the **PID Control** mode, **Torque Control** mode, or the **Vector Control** modes (sensorless or feedback).

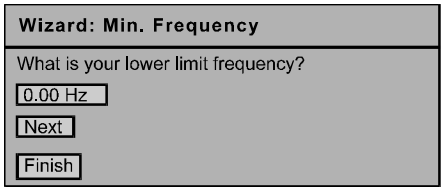

Adjust Accel/Decel Automatically?

When enabled, the G7 adjusts the acceleration and deceleration rates according to the applied load. The acceleration and deceleration times range from 12.5% to 800% of the programmed values for the active acceleration time [e.g., **Acceleration Time #1 (F009**) and **Deceleration Time #1 (F010**)].

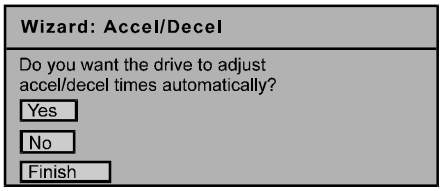

The motor and the load must be connected prior to selecting **Automatic Accel/Decel**.

If **Automatic Accel/Decel** is not enabled, the **Acceleration** screen will appear followed by the **Deceleration** screen as shown below.

Acceleration Time

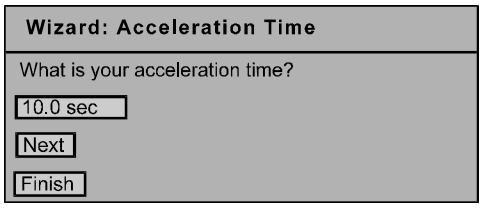

Deceleration Time

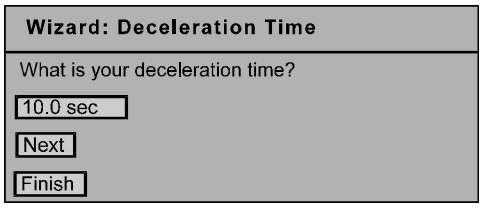

Volts per Hertz Setting

This function establishes the relationship between the output frequency and the output voltage.

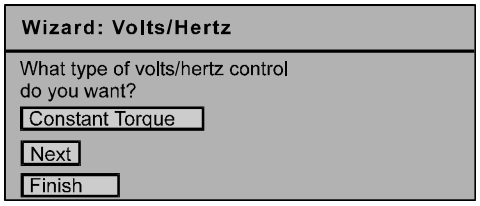

Settings:

- Constant Torque
- Variable Torque
- Automatic Torque Boost
- Sensorless Vector Control (Speed)
- Automatic Torque Boost + Automatic Energy Savings
- Sensorless Vector Control (Speed) + Automatic Energy Savings
- V/f 5-point Setting (Opens 5-point Setting Screen)
- Sensorless Vector Control (Speed/Torque Switching)
- PG Feedback Vector Control (Speed/Torque Switching)
- PG Feedback Vector Control (Speed/Position Switching)

Motor Current Rating

This parameter allows the user to input the full-load amperage (FLA) of the motor. This value is used by the ASD to determine the **Thermal Overload** protection setting for the motor and may be found on the nameplate of the motor.

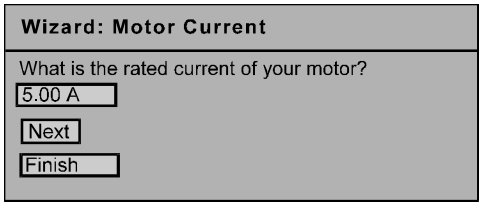

Command Source

This selection allows the user to establish the source of the **Run** commands (e.g., **F**, **R**, **Stop**, etc.).

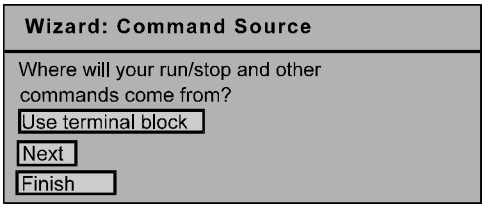

Settings:

- Use Control Terminal Strip
- Use LED Keypad Option
- Use Common Serial (TTL) — (Use for **LCD EOI Operation**)
- Use RS232/RS485
- Use Communication Card

Frequency Reference Source

This selection allows the user to establish the source of the **Frequency** (speed) command.

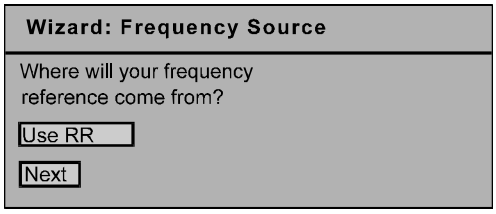

Settings:

- Use VI/II
- Use RR
- Use RX
- Use Option Card RX2
- Use LED Keypad Option
- Use Binary/BCD Input
- Use Common Serial (TTL) — (Use for **LCD EOI Operation**)
- Use RS232/RS485
- Use Communication Card
- Use Motorized Pot Simulation
- Use Pulse Input Option

Wizard: Finish

This screen is the final screen of the **Startup Wizard**. The basic parameters of the ASD have been set. Click **Finish** to return to the **Program** mode. Additional application-specific programming may be required.

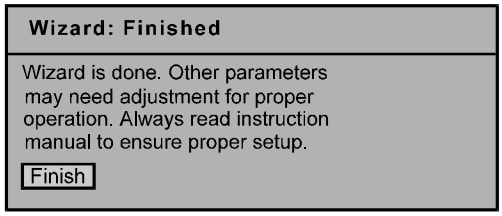

System Configuration and Menu Options

Root Menus

The **MON/PRG** key accesses the three primary modes of the G7: the **Frequency Command** mode, the **Monitor** mode, and the **Program** mode. From either mode, press the **MON/PRG** key to loop through to the other two modes (see Figure 21). While in the **Frequency Command** mode, pressing the **ESC** key toggles the menu to and from the **Panel** menu and the **Frequency Command** mode.

Note: ***Panel*** *menu changes made when accessing the* ***Panel*** *menu using the method shown in Figure 21 is effective for* ***Local*** *LCD* ***EOI*** *control* ***Only****.*

Figure 21. Root menu mapping.

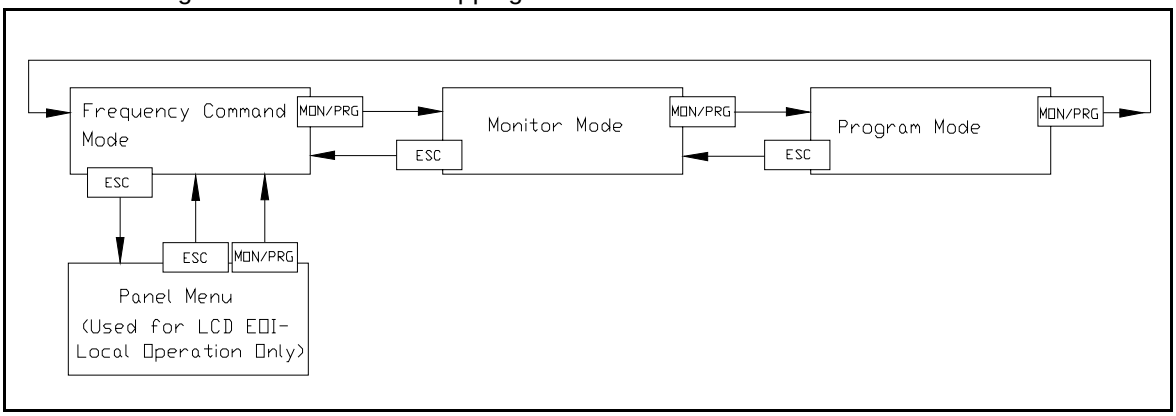

Frequency Command Mode

Frequency Setting

While operating in the **Local** mode (**Local** LED is illuminated on the front panel), the running frequency of the motor may be set from the **Frequency Command** screen. Using the **Rotary Encoder**, enter the **Frequency Command** value and then press the **Run** key. The motor will run at the **Frequency Command** speed and may be changed while running.

Scrolling Monitor

The **Output Current** and the **ASD Load** values are displayed (default setting) below the **Frequency Command** parameter of the **Frequency Command** screen. Other user-selected parameters may be displayed on this screen for quick-access monitoring while running. These parameters may be accessed and enabled for display by placing a check in the box next to the item listed at Program ⇒ Monitor Setup ⇒ **Scrolling Monitor Select**. If no parameters are enabled for display, **No Items** is displayed.

When more than two items are selected for display the items are scrolled automatically. The display time for each selected item may be set from 1 to 60 seconds. The parameters that may be displayed on the **Scrolling Monitor** are listed in the section titled Monitor Mode on pg. 45.

Panel Menu

The Panel menu may be accessed in either of two ways: while operating using the **LED Keypad Option** the **Panel** menu may be accessed via **F008** or if operating in the **Local** mode using the **LCD EOI**, press **ESC** from the **Frequency Command** screen.

The control settings of the **Panel** menu are effective for **LED** keypad control only if accessed via **Direct Access** method **F008** and are effective for the **LCD EOI** control only if accessed via the **Frequency Command** screen. Changes made to either of the **Panel** menus are not carried over to the other **Panel** menu.

Using either method provides quick access to the following **Panel** menu parameters:

Direction — **Forward** or **Reverse** (see **F008** for further information on this setting).

Stop Pattern — The **Decel Stop** or **Coast Stop** settings determines the method used to stop the motor when using the **Stop|Reset** key of the **EOI**. The **Decel Stop** setting enables the **Dynamic Braking** system setup at **F304** or the **DC Injection Braking** system setup at **F250**, **F251**, and **F252**. The **Coast Stop** setting allows the motor to stop at the rate allowed by the inertia of the load.

Note: *The **Stop Pattern** setting has no effect on the **Emergency Off** settings of* **F603**.

V/f Group — 1 of 4 **V/f** profiles may be selected and run. Each **V/f** profile is comprised of 4 user settings: **Base Frequency**, **Base Frequency Voltage**, **Manual Torque Boost**, and **Electronic Thermal Protection**. Expanded descriptions of these parameters may be found in the section titled Direct Access Parameter Information on pg. 59.

Accel/Decel Group — 1 of 4 **Accel/Decel** profiles may be selected and run. Each of the **Accel/Decel** profiles is comprised of 3 user settings: **Acceleration**, **Deceleration**, and **Pattern**. Expanded descriptions of these parameters may be found in the section titled Direct Access Parameter Information on pg. 59 (or see **F009**).

Feedback in Panel Mode — This feature enables or disables the **PID** feedback function.

Torque Limit Group — This parameter is used to select 1 of 4 preset positive torque limits to apply to the active motor (of a multiple motor configuration). The settings of profiles 1 – 4 may be setup at **F441**, **F444**, **F446**, and **F448**, respectively.

Monitor Mode

The **Monitor** mode allows the user to monitor motor performance variables, control settings, and configuration data during motor operation. There are 46 items that may be monitored from this mode. The items are listed and described below.

Note: *The **Monitor** mode is a read-only mode. The settings **cannot** be changed from the **Monitor** mode. For information on how to change the values, see the section titled Default Setting Changes on pg. 39.*

Running Frequency — Displays the G7 **Output Frequency**.

Frequency Reference — Displays the **Frequency Setpoint**.

Output Current — Displays the **Output Current** as a percentage of the rated capacity of the G7.

Bus Voltage — Displays the **Bus Voltage** as a percentage of the rated capacity of the G7.

Output Voltage — Displays the **Output Voltage** as a percentage of the rated capacity of the G7.

Input Signal Status — Displays the status of the discrete input lines of the **Control Terminal Strip**.

Out1 Out2 FL — Displays the status of the discrete output lines of the **Control Terminal Strip**.

Timer — Displays the **Cumulative Run Time** in hours.

Postcomp Frequency — Displays the **Output Frequency** after the application of the slip compensation correction value.

Feedback (inst.) — Provides a status of the **Real Time Feedback** in Hz.

Feedback (1 second) — Provides a status of the **1-Second Averaging** feedback in Hz.

Torque — Displays the **Output Torque** as a percentage of the rated capacity of the G7.

Torque Reference — Displays the **Torque Reference** as a percentage.

Torque Current — Displays the current being used to produce torque.

Excitation Current — Displays the current required to produce the excitation field.

PID Value — Displays the **PID** feedback value in Hz (Proportional-Integral-Derivative).

Motor Overload — Displays the **Motor Overload** value as a percentage of the rated capacity of the motor.

ASD Overload — Displays the **ASD Overload** as a percentage of the rated capacity of the G7.

DBR Overload — Displays the **DBR Overload** value as a percentage of the **Dynamic Braking Resistor** capacity.

Motor Load — Displays the **Motor Load** in real time as a percentage of the rated capacity of the motor.

ASD Load — Displays the **ASD Load** as a percentage of the rated capacity of the G7.

DBR Load — Displays the **DBR Load** as a percentage of the **Dynamic Braking Resistor** capacity.

Input Power — Displays the **Input Power** in Kilowatts (Kw).

Output Power — Displays the **Output Power** in Kilowatts (Kw).

Peak Current — Displays the **Peak Current** since the last start was initiated. The current is displayed as a percentage of the rated capacity of the G7.

Peak Voltage — Displays the **Peak Voltage** since the last start was initiated. The voltage is displayed as a percentage of the rated capacity of the G7.

PG Speed — Displays the **PG Speed**.

Direction — Displays the **Direction** command (forward/reverse).

PG Position — Displays the **Pulse Generator Position**.

RR — Displays the **RR** input value as a percentage of the full range of the RR value (potentiometer input).

***VI/II** — Displays the **VI/II** input setting as a percentage of the full range of the **VI/II** value.

Note: ** The **VI/II** input represents two analog inputs (and terminals). The **VI** input terminal is used for a 0 – 10 VDC analog signal and the **II** input terminal is used for current loop applications, such as with a 4-20 mA signal. Either may be used as a frequency or torque command source; however, the two cannot function simultaneously. Throughout this manual they will be listed as **VI/II**.*

RX — Displays the **RX** input setting as a percentage of the full range of the **RX** value (-10 to +10 VDC input).

RX2 — Displays the **RX2** input setting as a percentage of the full range of the **RX2** value.

Note: *The RX2 function is available on the **ASD-Multicom** option board only.*

FM — Displays the output frequency value as a percentage of the full range of the **FM** value.

AM — Displays the output current as a percentage of the full range of the **AM** value.

Option Type — Displays the type form number of the installed **ASD-Multicom** option board.

Option Term A — TBD.

Option Term B — TBD.

Option Term O — TBD.

Option Term P — TBD.

Max. Output — TBD.

Pattern Select — Active Group Number and Speed Number separated by a period (e.g., 2.3).

Repeats Left — Number of remaining Speed cycles in the active Group.

Pattern — Active Speed Number of the Group.

Pattern Time Left — Time remaining in the active Speed.

Fault Status — Displays the current fault or **No Fault**.

Program Mode

Table 6 lists the menu items of the **Program** mode and maps the flow of the menu selections. The **Parameter Numbers** for the listed functions are provided where applicable. The functions listed may be accessed (and changed) as mapped below or via the **Direct Access** method: Program ⇒ Direct Access ⇒ ***Applicable Parameter Number***.

Table 6. Program mode mapping**.**

Program Menu Navigation			
Primary Menu	**Sub Menu**	**Parameter Name**	**Parameter Number**
FUNDAMENTAL PARAMETERS	**Frequency Setting**	Maximum Frequency	F011
		Upper Limit	F012
		Lower Limit	F013
		V/f Pattern	F015
	Standard Mode Selection	Command Mode	F003
		Frequency Mode #1	F004
		Frequency Mode #2	F207
		Reference Priority Selection	F200
		Mode #1/#2 Switching Frequency	F208
	Accel/Decel #1 Settings	Accel #1	F009
		Decel #1	F010
		Accel/Decel Pattern	F502
		Automatic Accel/Decel Enable/Disable	F000
	Motor Set #1	#1 Base Frequency	F014
		#1 Max Output Voltage	F306
		#1 Torque Boost	F016
		#1 Electronic Thermal Protection Level	F600
STARTUP WIZARD	(See the section titled Startup Wizard Requirements on pg. 40.)		N/A
CHANGED FROM DEFAULT	(See the section titled Default Setting Changes on pg. 39.)		N/A
DIRECT ACCESS	(See the section titled Direct Access Parameter Information on pg. 59.)		N/A
EOI OPTION SETUPS	**Contrast (adjustment)**	Darker (highlight **Darker** and press **Enter**)	N/A
		Lighter (highlight **Lighter** and press **Enter**)	N/A
	Local/Remote Key	Command	N/A
		Frequency	N/A
	Realtime Clock Setup	Date and time setting (requires RTC option)	N/A
	Preferences	Double Click Speed	N/A
		Arrow Speed	N/A
		Encoder Speed	N/A
		Encoder Action	N/A
	Alarm Popups	Overheat Alarm	N/A
		Undervoltage Alarm	N/A

Program Menu Navigation			
Primary Menu	**Sub Menu**	**Parameter Name**	**Parameter Number**
EOI Option Setups	**Alarm Popups**	Over-current Alarm	N/A
		ASD Overload Alarm	N/A
		Motor Overload Alarm	N/A
		Timer	N/A
		Overtorque Alarm	N/A
		DBR Resistor Alarm	N/A
	Lockout	Lockout Reset	N/A
		Lockout Monitor	N/A
		Lockout Run/Stop	N/A
		Lockout Parameter Access	N/A
		Lockout Parameter Write	N/A
		Lockout Frequency Change	N/A
		Lockout Options	N/A
		Lockout Local/Remote	N/A
		Password (Enable/Enter)	N/A
	Review Startup Screen	(displays the Startup screen)	N/A
Utility Parameters	**Versions (read only)**	Typeform	N/A
		CPU Version	N/A
		CPU Revision	N/A
		EEPROM #1 Version	N/A
		EEPROM #2 Version	N/A
		EOI Version	N/A
	Display Units	User-defined Units Enable/Disable	N/A
		User-defined Units	N/A
		Hz Per User-defined Unit	F702
		Frequency Display Resolution	F703
		Units for Voltage and Current	F701
	Type Reset	None	F007
		Auto Setup for 50 Hz	
		Auto Setup for 60 Hz	
		Restore Factory Defaults	
		Clear Trip	
		Clear Run Timer	
		New Base Drive Board	
		Save User Parameters	
		Restore User Parameters	
		Reload EOI Flash	
		Reset EOI Memory	
		Comm. Stops During Reset	

Program Menu Navigation			
Primary Menu	**Sub Menu**	**Parameter Name**	**Parameter Number**
TERMINAL SELECTION PARAMETERS	**Input Terminal Function**	F	F111
		R	F112
		ST	F113
		RES	F114
		S1	F115
		S2	F116
		S3	F117
		S4	F118
		S5	F119
		S6	F120
		S7	F121
		12	F122
		13	F123
		14	F124
		15	F125
		16	F126
		ON	F110
	Output Terminal Functions	Out 1	F130
		Out 2	F131
		FL	F132
		4	F133
		5	F134
		6	F135
		7	F136
	Analog Input Functions	Acc/Dec Base Frequency Adjustment	F650
		Upper-limit Frequency Adjustment	F651
		Acceleration Time Adjustment	F652
		Deceleration Time Adjustment	F653
		Torque Boost Adjustment	F654
	Reach Settings	Low Speed Signal Output Frequency	F100
		Speed Reach Setting Frequency	F101
	FP Terminal Settings	FP Terminal Meter Selection	F676
		FP Terminal Meter Adjustment	F677
	Input Special Functions	ST Signal Selection	F103
		F/R Priority Selection (w/both on)	F105
		Input Terminal Priority	F106
		Extended Terminal Function	F107
	Line Power Switching	(Commercial Power Switching) On Trip Enable/Disable	F354

Program Menu Navigation			
Primary Menu	**Sub Menu**	**Parameter Name**	**Parameter Number**
TERMINAL SELECTION PARAMETERS	**Line Power Switching**	Switching-Frequency Setting and Enable/ Disable	F355
		ASD-Output Switching Wait-Time	F356
		Commercial Input-Power Wait-Time	F357
		Commercial-Power Switching-Frequency Hold-Time	F358
	Input Terminal Delays	F	F140
		R	F141
		ST	F142
		RES	F143
		S1-S4	F144
		S5-S16	F145
	Output Terminal Delays	Out1 On Delay	F150
		Out1 Off Delay	F160
		Out2 On Delay	F151
		Out2 Off Delay	F161
		FL On Delay	F152
		FL Off Delay	F162
		Out4 On Delay	F153
		Out4 Off Delay	F163
		Out5 On Delay	F154
		Out5 Off Delay	F164
		Out6 On Delay	F155
		Out6 Off Delay	F165
		Out7 On Delay	F156
		Out7 Off Delay	F166
FREQUENCY SETTING PARAMETERS	**Analog Filter**	Analog Input Filter Selection	F209
	Speed Ref. Setpoint	VI/II	F201
		RR	F210
		RX	F216
		RX2	F222
		BIN	F228
		PG	F234
	Jog Settings	Jog Run Frequency	F260
		Jog Stop Control	F261
		Jog Window Enable/Disable	N/A
	Preset Speeds	#1 Frequency & Characteristics	F018
		#2 Frequency & Characteristics	F019
		#3 Frequency & Characteristics	F020
		#4 Frequency & Characteristics	F021

Program Menu Navigation			
Primary Menu	**Sub Menu**	**Parameter Name**	**Parameter Number**
FREQUENCY SETTING PARAMETERS	**Preset Speeds**	#5 Frequency & Characteristics	F022
		#6 Frequency & Characteristics	F023
		#7 Frequency & Characteristics	F024
		#8 Frequency & Characteristics	F287
		#9 Frequency & Characteristics	F288
		#10 Frequency & Characteristics	F289
		#11 Frequency & Characteristics	F290
		#12 Frequency & Characteristics	F291
		#13 Frequency & Characteristics	F292
		#14 Frequency & Characteristics	F293
		#15 Frequency & Characteristics	F294
	Preset Speed Mode	Use Preset Speed Enable/Disable	F380
	Fwd/Rev Disable	Disable Forward Run/Disable Reverse Run	F311
	Motorized Pot Settings	Motorized Pot Setting Disposition at Power Down	F108
		Minimum Frequency	N/A
		Maximum Frequency	N/A
PROTECTION PARAMETERS	**Dynamic Braking**	Dynamic Braking Enable/Disable & Configuration	F304
	Stall	Over-current Stall Level	F601
		Over-voltage Stall Enable/Disable	F305
		Over-voltage Stall Level Configuration	N/A
		Over-voltage Stall Level (Fast)	F625
		Continuing Stall Period (During Positive Torque/Speed)	F452
		Stall Prevention During Regeneration	F454
	DC (Injection) Braking	Start Frequency	F250
		DC Braking Current	F251
		DC Braking Time	F252
		Motor Shaft Fixing Control	F253
		Motor Shaft Stationary Control Enable/Disable	F254
	Emergency Off Settings	Emergency Off Mode Configuration	F603
		DC Injection Braking Time	F604
		Emergency Off Activation of the FL Output Enable/Disable	N/A
	Retry/Restart Configuration	Number of Retries	F303
		Restart Conditions	F301
		Scan Rate	F312
		Lock-on Rate	F313
		Search Method	F314
		Search Inertia	F315

Program Menu Navigation			
Primary Menu	**Sub Menu**	**Parameter Name**	**Parameter Number**
PROTECTION PARAMETERS	**Undervoltage/ Ridethrough**	Ridethrough Mode	F302
		Ridethrough Time	F310
		Undervoltage Stall Level	F629
		Undervoltage Trip Enable/Disable	F627
		Undervoltage Detection Time	F628
	Overload	OL Reduction Starting Frequency	F606
		Motor 150% OL Time Limit	F607
		Soft Stall Enable/Disable	F017
		Motor Overload Trip Enable/Disable	N/A
		V/f Motor Enable/Disable	N/A
	Trip Settings	Trip Save at Power Down Enable/Disable	F602
	Cooling Fan Control	Cooling Fan Control Mode	F620
	Cumulative Run Timer	Cumulative Run Timer Alarm Setting	F621
	Phase Loss	Output Phase Loss Detection Enable/Disable	F605
	Low Current Settings	Low Current Trip/Alarm Configuration	F610
	Abnormal Speed Settings	Abnormal Speed Detection Filter Time	F622
		Overspeed Detection Frequency Range	F623
		Speed Drop Detection Frequency Range	F624
	Short Circuit Detect Pulse	Short-Circuit-Pulse Run Command	F613
		Short-Circuit-Pulse Run Duration	F614
	Overtorque Settings	Overtorque Trip Enable/Disable	F615
		Overtorque Trip/Alarm Level During Power Operation	F616
		Overtorque Trip/Alarm Level During Regeneration	F617
		Overtorque Detection Time	F618
	Brake Fault Timer	Braking Trouble Internal Timer	F630
		Release After Run Timer	F632
	Base Frequency Voltage	Supply Voltage Compensation Enable/Disable	F307
		Output Voltage Limitation Enable/Disable	
	Soft Start	Suppression of Inrush-Current Timing	F609
		Interlock with ST	
TORQUE SETTING PARAMETERS	**Set Points**	VI/II	F205
		RR	F214
		RX	F220
	Set Points	RX2	F226
		BIN	F232
	Torque Control	Torque Command Selection	F420
		Torque Command Filter	F421
		Synchronized Torque Bias Input Selection	F422

Program Menu Navigation			
Primary Menu	**Sub Menu**	**Parameter Name**	**Parameter Number**
TORQUE SETTING PARAMETERS	**Torque Control**	Tension Torque Bias Input Selection	F423
		Load Sharing Gain Input Selection	F424
	Torque Limit Settings	Positive Torque Limit #1Selection	F440
		Negative Torque Limit #1Selection	F442
		Manual Settings	F441
		Torque Limit Mode	F450
		Torque Limit Mode (speed dependent)	F451
	Manual Torque Limit Settings	#1 Positive/Negative Torque Limit Settings	F441
		#2 Positive/Negative Torque Limit Settings	F444
		#3 Positive/Negative Torque Limit Settings	F446
		#4 Positive/Negative Torque Limit Settings	F448
	Torque Speed Limiting	Torque Command Mode Selection	F429
		Forward Speed Limit Selection	F425
		Forward Speed Limit Level	F426
		Reverse Speed Limit Selection	F427
		Reverse Speed Limit Level	F428
		Speed Limit Torque Reference Selection	F430
		Speed Limit Torque Level	F431
		Speed Limit Torque Band	F432
		Speed Limit Torque Recovery Time	F433
FEEDBACK PARAMETERS	**Feedback Settings**	Input Selection	F360
		Proportional (P) Gain	F362
		Integral (I) Gain	F363
		Differential (D) Gain	F366
		Delay Filter	F361
		Deviation Limits	F364
		Position Difference Limit	F631
	PG Settings	Number of PG Input Pulses	F367
		PG Input Phases	F368
		PG Disconnection Detection Selection	F369
		Electronic Gear Setting	F370
		Position Loop Gain	F371
		Positioning Completion Range	F372
		Frequency Limit at Position	F373
		Current Control Proportional Gain	F374
		Current Control Integral Gain	F375
		Speed Loop Proportional Gain	F376
		Speed Loop Integral Gain	F377
		Motor Counter Data Selection	F378
		Speed Loop Parameter Ratio	F379

Program Menu Navigation			
Primary Menu	**Sub Menu**	**Parameter Name**	**Parameter Number**
FEEDBACK PARAMETERS	**Drooping Control**	Drooping Gain 100%	F320
		Speed at Drooping Gain 0%	F321
		Speed at Drooping Gain 100%	F322
		Drooping Insensitive Torque Band	F323
		Drooping Output Filter	F324
		Drooping Reference	F327
		Load Inertia (Acc/Dec Torque)	F325
		Load Torque Filter	F326
	Override Control	Adding Input Selection	F660
		Multiplying Input Selection	F661
		LED Option Override Multiplication Gain	F729
PATTERN RUN CONTROL PARAMETERS	**Pattern Run**	Pattern Run Mode Enable/Disable and Restart Configuration	F520
	Speeds	Pattern #1 Speeds	F530
		Pattern #2 Speeds	F540
		Pattern #3 Speeds	F550
		Pattern #4 Speeds	F560
	Preset Speeds	#1 Frequency & Characteristics	F018
		#2 Frequency & Characteristics	F019
		#3 Frequency & Characteristics	F020
		#4 Frequency & Characteristics	F021
		#5 Frequency & Characteristics	F022
		#6 Frequency & Characteristics	F023
		#7 Frequency & Characteristics	F024
		#8 Frequency & Characteristics	F287
		#9 Frequency & Characteristics	F288
		#10 Frequency & Characteristics	F289
		#11 Frequency & Characteristics	F290
		#12 Frequency & Characteristics	F291
		#13 Frequency & Characteristics	F292
		#14 Frequency & Characteristics	F293
		#15 Frequency & Characteristics	F294
	Preset Speed Mode	Use Preset Speed Enable/Disable	F380
COMMUNICATION SETTING PARAMETERS	**Communication Settings**	ASD Number	F802
		Logic (TTL) Baud Rate	F800
		RS232/RS485 Baud Rate	F820
		Parity	F801
		RS232/RS485 Communication Time Out Time	F803
		Logic (TTL) Communication Time Out Action	F804
		RS232/RS485 Communication Time Out Action	N/A

Program Menu Navigation			
Primary Menu	**Sub Menu**	**Parameter Name**	**Parameter Number**
COMMUNICATION SETTING PARAMETERS	**Communication Settings**	Communication Interval (logic)	F805
		RS232/RS485 Wire Count	F821
		RS232/RS485 Response Time	F825
		TTL Master Output Selection	F806
		RS232/RS485 Master Output Selection	F826
		LCD Port Connection Type	N/A
	Communication Reference Adjust	Frequency Point Selection	F810
	S20 Settings	Receive Address	F860
		Transmit Address	F861
		Speed Reference Station	F862
		Speed Reference Address	F863
		Torque Reference Station	F865
		Torque Reference Address	F866
		Fault Detect Station Number	F868
		Station Mode	F869
		S20 Reset	F899
		Error Mode	F850
		Error Detect Time	F851
	Scan Receive Settings	#1 Scan Receive	F831
		#2 Scan Receive	F832
		#3 Scan Receive	F833
		#4 Scan Receive	F834
		#5 Scan Receive	F835
		#6 Scan Receive	F836
	Scan Transmit Settings	#1 Scan Transmit	F841
		#2 Scan Transmit	F842
		#3 Scan Transmit	F843
		#4 Scan Transmit	F844
		#5 Scan Transmit	F845
		#6 Scan Transmit	F846
	Communication Error	Command Request Disposition on Error	F830
	Optional Parameters	Optional Parameter #1	F890
		Optional Parameter #2	F891
		Optional Parameter #3	F892
		Optional Parameter #4	F893
		Optional Parameter #5	F894

Program Menu Navigation			
Primary Menu	**Sub Menu**	**Parameter Name**	**Parameter Number**
METER TERMINAL ADJUSTMENT PARAMETERS	**FM**	FM Terminal Assignment	F005
		FM Terminal Adjustment	F006
	AM	AM Terminal Assignment	F670
		AM Terminal Adjustment	F671
	Analog1	Analog 1 Terminal Assignment	F672
		Analog 1 Terminal Adjustment	F673
	Analog2	Analog 2 Terminal Assignment	F674
		Analog 2 Terminal Adjustment	F675
MOTOR PARAMETERS	**Vector Motor Model**	AutoTune Enable/Disable and Reset Config.	F400
		AutoTune Enable/Disable of Motor Constant 3	F414
		Slip Frequency Gain	F401
		Motor Constant 1 (primary resistance)	F402
		Motor Constant 2 (secondary resistance)	F403
		Motor Constant 3 (exciting inductance)	F404
		Motor Constant 4 (load inertia)	F405
		Motor Constant 5 (leakage inductance)	F410
	Motor Settings	Number of Motor Poles	F411
		Motor Capacity (kW)	F412
		Motor Type	F413
	Motor Set #1	#1 Base Frequency	F014
		#1 Max Output Voltage	F306
		#1 Torque Boost	F016
		#1 Electronic Thermal Protection Level	F600
	Motor Set #2	#2 Base Frequency	F170
		#2 Max Output Voltage	F171
		#2 Torque Boost	F172
		#2 Electronic Thermal Protection Level	F173
	Motor Set #3	#3 Base Frequency	F174
		#3 Max Output Voltage	F175
		#3 Torque Boost	F176
		#3 Electronic Thermal Protection Level	F177
	Motor Set #4	#4 Base Frequency	F178
		#4 Max Output Voltage	F179
		#4 Torque Boost	F180
		#4 Electronic Thermal Protection Level	F181
MONITOR SETUP	**Trip History**	Trip History Records	N/A
	Trip Monitor from ASD	Most Recent	N/A
		Second Most Recent	N/A
		Third Most Recent	N/A

Program Menu Navigation			
Primary Menu	**Sub Menu**	**Parameter Name**	**Parameter Number**
MONITOR SETUP	**Trip Monitor from ASD**	Fourth Most Recent	N/A
	Scrolling Monitor Select	Scrolling Monitor Select	N/A
SPECIAL CONTROL PARAMETERS	**Frequency Control**	Start Frequency	F240
		End Frequency	F243
		Run Frequency	F241
		Run Frequency Hysteresis	F242
	Jump Frequencies	Jump Frequency Bandwidth Settings	F271
		Jump Frequency Processing Selection	F276
	Carrier Frequency	PWM Carrier Frequency Setting	F300
	Accel/Decel #1 – #4 Settings	Accel/Decel/Pattern #1 Configuration	F009
		Accel/Decel/Pattern #2 Configuration	F500
		Accel/Decel/Pattern #3 Configuration	F510
		Accel/Decel/Pattern #4 Configuration	F514
	Accel/Decel Special	S-Pattern Lower Limit Adjustment	F506
		S-Pattern Upper Limit Adjustment	F507
		Accel/Decel Time Lower Limit	F508
		Accel/Decel Switching Frequency #1	F505
		Accel/Decel Switching Frequency #2	F513
		Accel/Decel Switching Frequency #3	F517
		Display Resolution	F704
	Crane/Hoist Load	High-Speed Operation at Light Load	F330
		Light-load High-speed Operation Switching Lower Limit Frequency	F331
		Light-load High-speed Operation Load Waiting Time	F332
		Light-load High-speed Operation Load Detection Time	F333
		Light-load High-speed Operation Heavy Load Detection Time	F334
		Switching Load Torque During Forward Run	F335
		Heavy Load Torque During Acceleration in the Forward Direction	F336
		Heavy Load Torque During Deceleration in the Forward Direction	F337
		Switching Load Torque During Reverse Run	F338
		Heavy Load Torque During Acceleration in the Reverse Direction	F339
		Heavy Load Torque During Deceleration in the Reverse Direction	F340
		Frequency for Automatic High-speed Operation at Light Load	F341
	Backlash Setup	Not available at the time of this release.	N/A

Program Menu Navigation			
Primary Menu	**Sub Menu**	**Parameter Name**	**Parameter Number**
SPECIAL CONTROL PARAMETERS	**V/f Five Point Setting**	#1 Frequency Setting	F190
		#1 Voltage Setting	F191
		#2 Frequency Setting	F192
		#2 Voltage Setting	F193
		#3 Frequency Setting	F194
		#3 Voltage Setting	F195
		#4 Frequency Setting	F196
		#4 Voltage Setting	F197
		#5 Frequency Setting	F198
		#5 Voltage Setting	F199
	Low Output Disable Function	LOD Control and Stopping Method	F731
		LOD Start Level	F732
		LOD Start Time	F733
		LOD Setpoint Boost	F734
		LOD Boost Time	F735
		LOD Feedback Level	F736
		LOD Restart Delay Time	F737
	Earth Fault	Earth Fault Alarm Level	F640
		Earth Fault Alarm Time	F641
		Earth Fault Trip Level	F642
		Earth Fault Trip Time	F643
	Special Parameters	V/f Adjustment Coefficient	F183
		0 Hz Dead Band Frequency Setting Signal	F244
		0 Hz Command Stop Function	F255
		Over Exciting Cooperation	F481
		Stall Cooperation Gain at Field Weakening Zone	F485
		Exciting Starting Rate	N/A
		Compensation Coefficient for Iron Loss	F487
		Voltage Compensation Coefficient for Dead Time	N/A
		Dead Time Compensation Enable/Disable	F489
		Dead Time Compensation Bias	F490
		Switching Frequency Between Current and Voltage	F491
		Optional Analog Terminal Mark	N/A
		Current Differential Gain	F454
		Exciting Strengthening Coefficient	F480
		Enable/Disable User Parameter Initialization During Typeform Initialization	F709
		% Current Vector Control	F482
		% Voltage Vector Control	F483
		% Constant Vector Control	F484

Direct Access Parameter Information

The **G7 ASD** has the ability to allow the user direct access to the motor control functions. The functions listed below have an associated **Parameter Number** which accesses its setting. There are two ways in which the motor-control parameters may be accessed for modification: Program ⇒ ***applicable menu path*** or Program ⇒ Direct Access ⇒ ***applicable parameter number***. Both methods access the parameter via the **Program** mode. Once accessed, the parameter may be viewed or changed.

The **Program** mode allows the user to develop an application-specific motor control profile. Motor control functions may be set to accommodate specific power and timing requirements for a given application. The configurable parameters of the **Program** mode that have user-accessible **Parameter Numbers** are listed and described below.

Note: *The setup procedures included within this section may require a **Reset** before performing the procedure. Application-specific settings may then be performed. The pre-Reset conditions may be saved (see F007).*

Direct Access Parameters/Numbers

Automatic Accel/Decel #1

Direct Access Number — F000

Parameter Type — **Check Box**

Factory Default — **Disabled**

Changeable During Run — **No**

Program ⇒ Fundamental Parameters ⇒ **Accel/Decel #1 Settings**

This parameter **Enables/Disables** the ability of the ASD to adjust the acceleration and deceleration rates in accordance with the applied load automatically.

The adjusted acceleration and deceleration times range from 12.5% to 800% of the programmed values for **Acceleration Time #1** (**F009**) and **Deceleration Time #1** (**F010**).

Settings:

Disabled
Enabled (box checked)

Note: *The motor and the load must be connected prior to selecting **Automatic Accel/Decel**.*

Command Mode Selection

Direct Access Number — F003

Parameter Type — **Selection List**

Factory Default — **Use Control Terminal Strip**

Changeable During Run — **No**

Program ⇒ Fundamental Parameters ⇒ Standard Mode Selection ⇒ **Command Mode**

The **Command Mode Selection** establishes the source of the command input for the ASD. **Command** inputs include **Run**, **Stop**, **Forward**, etc. The **Override** feature may supersede the **Command Mode Selection** setting (see Command Mode and Frequency Mode Control on pg. 31).

Settings:

Use Control Terminal Strip
Use LED Keypad Option
Use Common Serial (TTL)
Use RS232/RS485
Use Communication Card

Frequency Mode #1

Direct Access Number — F004

Parameter Type — **Selection List**

Factory Default — **Use RR**

Changeable During Run — **No**

Program ⇒ Fundamental Parameters ⇒ Standard Mode Selection ⇒ **Frequency Mode #1**

The **Frequency Mode #1** setting establishes the source of the frequency-control input for the ASD. The **Override** feature may supersede the **Frequency Mode #1** setting (see Command Mode and Frequency Mode Control on pg. 31).

Note: *Only **Bolded** items from the **Settings** list below may be placed in the **Override** mode. See the section titled Command Mode and Frequency Mode Control on pg. 31 for further information on the **Override** feature.*

Settings:

Use VI/II
Use RR
Use RX
Use Option Card RX2
Use LED Keypad Option
Use Binary/BCD Input
Use Common Serial (TTL)
Use RS232/RS485
Use Communication Card
Use Motorized Pot. Simulation
Use Pulse Input Option

FM Terminal Assignment

Direct Access Number — F005

Parameter Type — **Selection List**

Factory Default — **Output Frequency**

Changeable During Run — **Yes**

Program ⇒ Meter Terminal Adjustment Parameters ⇒ **FM**

This setting determines the output function of the **FM** analog output terminal. The **FM** output terminal produces an output current that is proportional to the magnitude of the function assigned to this terminal. The available assignments for this output terminal are listed in Table 7 on pg. 61.

Note: *To read **voltage** at this terminal a 100 – 500Ω resistor is required and it must be connected from FM (+) to FM (-). The voltage is read across the 100 – 500Ω resistor.*

Current may be read by connecting an ammeter from FM (+) to FM (-).

The **FM** analog output has a maximum resolution of 1/1024. The **FM Terminal Adjustment** (**F006**) must be used to calibrate the output signal for a proper response. **SW-2** may be switched to allow for the full-range output to be either 0 – 1 mA or 4 – 20 mA when providing an output current, or either 0 – 1 or 1 – 7.5 volts when providing an output voltage at this terminal.

FM Terminal Adjustment

Direct Access Number — F006

Parameter Type — **Numerical**

Factory Default — **512**

Changeable During Run — **Yes**

Minimum — 0

Maximum — 1280

Program ⇒ Meter Terminal Adjustment Parameters ⇒ **FM**

This function is used to calibrate the **FM** analog output terminal.

To calibrate the **FM** analog output, connect a meter (current or voltage) as described at **F005**. With the drive running at a known frequency, adjust this parameter (**F006**) until the running frequency produces the desired DC level output at the **FM** terminal.

The magnitude of the AM/FM output signal at full-scale is selection-specific and may be adjusted (see **F671** and **F006**) to fit application-specific requirements. Table 7 shows the default full-scale output setting of the AM/FM terminal for each selection. The column on the right side of Table 7 shows the actual AM/FM output for an EOI display of 100% (default setting).

Table 7. Output terminal selections for the **AM**, **FM**, **FP**, and **Analog 1**&**2** terminals.

Function	AM/FM Output Value at 100% EOI-Displayed Output
Output Frequency (**FM** and **FP** default setting)	Maximum Frequency
Frequency Reference	
Output Current (**AM** default setting)	150%
DC Bus Voltage	
Output Voltage (**Analog 1** default setting)	
Post-compensation Frequency (**Analog 2** default setting)	Maximum Frequency
Speed Feedback (realtime)	
Speed Feedback (1 sec filter)	
Torque	150%
Torque Command	
Internal Torque Base	
Torque Current	
Excitation Current	
PID Feedback Value	Maximum Frequency
Motor Overload Ratio	Motor Overload Trip Point Setting
ASD Overload Ratio	ASD Overload Trip Point Setting
PBR (DBR) Overload Ratio	DBR Overload Trip Point Setting
PBR (DBR) Load Ratio	Maximum DBR Duty Cycle
Input Power	1.73 * input voltage * ASD rated current
Output Power	
Peak Output Current	150%
Peak DC Bus Voltage	
PG Counter	32767 Encoder Pulses
Position Pulse	
RR Input	100%
VI/II Input	
RX Input	
RX2 Input	
FM Output (used for factory testing only)	
AM Output (used for factory testing only)	
Meter Adjust Value	
Analog Output	
Load Torque	150%

Type Reset

Program ⇒ Utility Parameters ⇒ **Type Reset**

Direct Access Number — F007

Parameter Type — **Selection List**

Factory Default — **None**

Changeable During Run — **No**

This feature assists the user when performing fault analysis or by allowing a quick system setup change when required. Performing a **Type Reset** results in one of the following user-selected post-reset configurations.

Settings:

None
Auto Setup for 50 Hz
Auto Setup for 60 Hz
Restore Factory Defaults
Clear Trip
Clear Run Timer
New Base Drive Board
*Save User Parameters
Restore User Parameters
Reload EOI Flash
Reset EOI Memory

Note: **User settings that are stored in the memory of the EOI are not saved via the **Save User Parameters** selection. The unsaved functions include the **EOI Option Setups**, (Utility Parameters ⇒) **Display Units**, and (Monitor Setup ⇒) **Scrolling Monitor Select**.*

Direction (of motor rotation)

No path available (Direct Access Only)

Direct Access Number — F008

Parameter Type — **Selection List**

Factory Default — **Forward**

Changeable During Run — **Yes**

While operating using the **LED Keypad Option** this parameter sets the direction of motor rotation. This setting may be changed during operation. This setting will not override parameter **F311** (**Forward/Reverse Disable**).

If either direction is disabled via parameter **F311**, the disabled direction will not be recognized if commanded by the **LED Keypad**. If both directions are disabled via parameter **F311**, the direction command from the **LED Keypad** will determine the direction of the motor rotation.

Settings:

Forward
Reverse

Note: *If using the **LCD EOI,** press **ESC** from the **Frequency Command** screen to access the Motor Direction parameter.*

Accel #1 Time

Program ⇒ Fundamental Parameters ⇒ **Accel/Decel #1 Settings**

This parameter specifies the time in seconds for the drive to go from 0.0 Hz to the **Maximum Frequency** for the **#1 Acceleration** profile. The accel/decel pattern may be set using **F502**. The minimum accel/decel time may be set using **F508**.

Note: *An acceleration time shorter than the load will allow may cause nuisance tripping and mechanical stress to loads.*
Automatic Accel/Decel *and* ***Stall*** *settings may lengthen the acceleration time.*

Acceleration

The acceleration rate of a motor is determined by several factors: applied power, applied load, and the physical properties of the motor (winding parameters, motor size, etc.). The ASD will control the first of these factors: input power. The settings of the ASD control the frequency and amplitude of the applied voltage to the motor.

Under most operating conditions, as the output frequency of the drive goes up so does the output voltage (linear acceleration). The ASD has the ability to modify the relationship between frequency and voltage automatically to produce smoother operation or increased (starting) torque.

Direct Access Number — F009

Parameter Type — **Numerical**

Factory Default — **(ASD-dependent)**

Changeable During Run — **Yes**

Minimum — 0.1

Maximum — 6000

Units — Seconds

Decel #1 Time

Program ⇒ Fundamental Parameters ⇒ **Accel/Decel #1 Settings**

This parameter specifies the time in seconds for the drive to go from the **Maximum Frequency** to 0.0 Hz for the **#1 Deceleration** profile. The accel/decel pattern may be set using **F502**.

When operating with the **Automatic Accel/Decel** enabled (**F000**) the minimum accel/decel time may be set using **F508**.

Note: *A deceleration time shorter than the load will allow may cause nuisance tripping and mechanical stress to loads.*
Automatic Accel/Decel *and* ***Stall*** *settings may lengthen the acceleration time.*

Direct Access Number — F010

Parameter Type — **Numerical**

Factory Default — **(ASD-dependent)**

Changeable During Run — **Yes**

Minimum — 0.1

Maximum — 6000

Units — Seconds

Maximum Frequency

Program ⇒ Fundamental Parameters ⇒ **Frequency Settings**

This setting determines the absolute maximum frequency that the ASD can output. This setting is also referred to as **FH**.

Accel/decel times are calculated based on the **Maximum Frequency** setting.

Note: *This setting may not be lower than the* ***Upper Limit*** *setting* ***(F012)****.*

Direct Access Number — F011

Parameter Type — **Numerical**

Factory Default — **80.0**

Changeable During Run — **No**

Minimum — 30.0

Maximum — 299.0

Units — Hz

Upper Limit Frequency

Program ⇒ Fundamental Parameters ⇒ **Frequency Settings**

This parameter sets the highest frequency that the ASD will accept as a frequency command or frequency setpoint. The ASD may output frequencies higher than the **Upper Limit Frequency** (but, lower than the **Maximum Frequency**) when operating in the **PID Control** mode, **Torque Control** mode, or the **Vector Control** modes (sensorless or feedback).

Note: *This setting may not be higher than the* ***Maximum Frequency (F011)*** *setting.*

Direct Access Number — F012

Parameter Type — **Numerical**

Factory Default — **80.0**

Changeable During Run — **Yes**

Minimum — 0.0

Maximum — **Max. Freq.** (**F011**)

Units — Hz

Lower Limit Frequency

Program ⇒ Fundamental Parameters ⇒ **Frequency Settings**

This parameter sets the lowest frequency that the ASD will accept as a frequency command or frequency setpoint. The ASD will output frequencies lower than the **Lower Limit Frequency** when accelerating to the lower limit or decelerating to a stop. Frequencies below the **Lower Limit** may also be output when operating in the **PID Control** mode, **Torque Control** mode, or the **Vector Control** modes (sensorless or feedback).

Direct Access Number — F013

Parameter Type — **Numerical**

Factory Default — **0.0**

Changeable During Run — **Yes**

Minimum — 0.0

Maximum — **Upper Limit** (**F012**)

Units — Hz

Motor #1 Base Frequency

Program ⇒ Fundamental Parameters ⇒ **Motor Set #1**

The **Base Frequency** setting determines the frequency at which the output voltage of the ASD reaches its maximum setting. The maximum voltage setting cannot be more that the input voltage (see **Maximum Output Voltage** at **F306**). There are four **Base Frequency** profile settings: #1 – #4.

Note: *For proper motor operation, the **Base Frequency** is normally set for the name-plated frequency of the motor.*

Direct Access Number — F014

Parameter Type — **Numerical**

Factory Default — **60.0**

Changeable During Run — **Yes**

Minimum — 25.0

Maximum — 299.0

Units — Hz

V/f Pattern

Program ⇒ Fundamental Parameters ⇒ **Frequency Settings**

This function establishes the relationship between the output frequency and the output voltage.

Settings:

Constant Torque
Variable Torque
Automatic Torque Boost
Sensorless Vector Control (speed)
Auto Torque Boost with Automatic Energy Savings
Sensorless Vector Control (speed) with Automatic Energy Savings
V/f 5-Point Setting (opens 5-point setting screen)
Sensorless Vector Control (speed/torque switching)
PG Feedback Vector Control (speed/torque switching)
PG Feedback Vector Control (speed/position switching)

Note: *For proper operation, the carrier frequency must be 2.2 kHz or above except when operating in the **Constant Torque**, **Variable Torque**, or the **5-Point Setting** modes.*

The **Automatic Torque Boost** and the **Sensorless Vector Control** selections use the motor tuning parameters of the drive to properly configure the ASD for the motor being used. If **Load Reactors** or **Long Lead Filters** are used, or if the capacity of the ASD is greater than the motor, manual tuning of the motor parameters may be required for optimum performance.

Direct Access Number — F015

Parameter Type — **Selection List**

Factory Default — **Constant Torque**

Changeable During Run — **No**

Motor #1 Torque Boost

Program ⇒ Fundamental Parameters ⇒ **Motor Set #1**

Direct Access Number — F016

Parameter Type — **Numerical**

Factory Default — **(ASD-dependent)**

Changeable During Run — **Yes**

Minimum — 0.0

Maximum — 30.0

Units — %

The **Motor #1 Torque Boost** function is used to increase the low frequency torque for high-inertia loads by increasing the output voltage at frequencies below ½ of the **#1 Base Frequency** (**F014**) setting.

The value programmed as a boost percentage establishes an output voltage vs. output frequency relationship to be used to start the motor or to provide smoother operation.

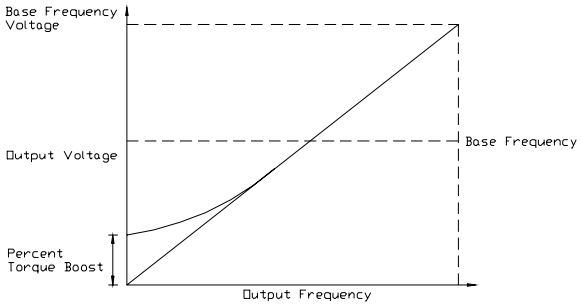

Note: *Setting an excessive **Torque Boost** level may cause nuisance tripping and mechanical stress to loads.*

Soft Stall

Program ⇒ Protection Parameters ⇒ **Overload**

Direct Access Number — F017

Parameter Type — **Check Box**

Factory Default — **Disabled**

Changeable During Run — **No**

This parameter **Enables/Disables** the **Soft Stall** function. When enabled, the **Soft Stall** function reduces the output frequency of the ASD when the current requirements of the motor exceed the **Electronic Thermal Protection #1** setting (**F600**); thus, reducing the output current.

If the current drops below the motor overload protection level setting within a specified time, the output of the ASD will accelerate to the programmed frequency setpoint. If not, a trip will be incurred.

The **Soft Stall** feature is available when the (Program ⇒ Protection Parameters ⇒ Overload ⇒) **Motor Overload Trip Enable/Disable** parameter is enabled only.

Soft Stall is highly effective in preventing motor overload trips when used on fans, blowers, pumps, and other centrifugal loads which require less torque at lower frequencies.

Note: *The **Soft Stall** setting may affect acceleration times and patterns.*

Settings:

Disabled
Enabled (box checked)

Preset Speed #1

Direct Access Number — F018

Parameter Type — **Numerical**

Factory Default — **0.0**

Changeable During Run — **Yes**

Minimum — **Lower Limit** (**F013**)

Maximum — **Upper Limit** (**F012**)

Units — Hz

Program ⇒ Pattern Run Control ⇒ Preset Speeds ⇒ **1**

Up to 15 output frequency values that fall within the **Lower Limit** and the **Upper Limit** range may be programmed into the drive and output as a **Preset Speed**. This parameter assigns an output frequency to binary number 0001 and is identified as **Preset Speed #1**. The binary number is applied to **S1** – **S4** of the **Control Terminal Strip** to output the **Preset Speed**.

Perform the following setup to allow the system to receive **Preset Speed** control input at the **S1 – S4** terminals:

1. Program ⇒ Fundamental Parameters ⇒ Standard Mode Selection ⇒ **Use Control Terminal Strip**.
2. Program ⇒ Terminal Selection Parameters ⇒ Input Terminals ⇒ **S1** (set to **Preset Speed Command 1**; LSB of 4-bit count). Repeat for **S2** – **S4** (MSB of 4-bit count) as **Preset Speed Command 2** – **4**, respectively (all **Normally Open**).

Note: *The default setting of **S4** is **EOff**, but this terminal may be re-assigned as the MSB.*

3. Program ⇒ Frequency Setting Parameters ⇒ Preset Speeds ⇒ **1** (press **Enter** twice and set an output frequency as **Preset Speed #1**; repeat for **Preset Speeds 2** – **15** as required).
4. Program ⇒ Frequency Setting Parameters ⇒ Preset Speed Mode ⇒ **Use Speed Modes** (**Enable/Disable**).

   When **Enabled**, the direction, accel/decel, and torque settings of the **Preset Speed** being run are used.

   When **Disabled**, only the speed setting of the **Preset Speed** being run is used.
5. Place the system in the **Remote** mode (**Local|Remote** LED Off).
6. Provide a **Run** command (connect **F** and/or **R** to **CC**).

Connect **S1** to **CC** to run **Preset Speed #1** (**S1** to **CC** = 0001 binary).

With **S1** – **S4** configured to output **Preset Speeds** (**F115 – F118**), 0001 – 1111 may be applied to **S1 – S4** of the **Control Terminal Strip** to run the associated **Preset Speed**. If bidirectional operation is required, **F** and **R** must be connected to **CC**, and **Use Speed Modes** must be enabled at **F380**.

With **S1** being the least significant bit of a binary count, the **S1 – S4** settings will produce the programmed speed settings as indicated below.

Preset Speeds are also used in the **Pattern Run** mode.

Preset	S4 MSB	S3	S2	S1 LSB	Output
1	0	0	0	**1**	**F018**
2	0	0	**1**	0	**F019**
3	0	0	**1**	**1**	**F020**
4	0	**1**	0	0	**F021**
5	0	**1**	0	**1**	**F022**
6	0	**1**	**1**	0	**F023**
7	0	**1**	**1**	**1**	**F024**
8	**1**	0	0	0	**F287**
9	**1**	0	0	**1**	**F288**
10	**1**	0	**1**	0	**F289**
11	**1**	0	**1**	**1**	**F290**
12	**1**	**1**	0	0	**F291**
13	**1**	**1**	0	**1**	**F292**
14	**1**	**1**	**1**	0	**F293**
15	**1**	**1**	**1**	**1**	**F294**

Note: *1 = Terminal connected to **CC**.*

Preset Speed #2

Direct Access Number — F019

Parameter Type — **Numerical**

Factory Default — **0.0**

Changeable During Run — **Yes**

Minimum — **Lower Limit** (**F013**)

Maximum — **Upper Limit** (**F012**)

Units — Hz

Program ⇒ Pattern Run Control ⇒ Preset Speeds ⇒ **2**

This parameter assigns an output frequency to binary number 0010 and is identified as **Preset Speed #2**. The binary number is applied to **S1** – **S4** of the **Control Terminal Strip** to output the **Preset Speed** (see **F018** for further information on this parameter).

Preset Speed #3

Program ⇒ Pattern Run Control ⇒ Preset Speeds ⇒ **3**

This parameter assigns an output frequency to binary number 0011 and is identified as **Preset Speed #3**. The binary number is applied to **S1** – **S4** of the **Control Terminal Strip** to output the **Preset Speed** (see **F018** for further information on this parameter).

Direct Access Number — F020
Parameter Type — **Numerical**
Factory Default — **0.0**
Changeable During Run — **Yes**
Minimum — **Lower Limit** (**F013**)
Maximum — **Upper Limit** (**F012**)
Units — Hz

Preset Speed #4

Program ⇒ Pattern Run Control ⇒ Preset Speeds ⇒ **4**

This parameter assigns an output frequency to binary number 0100 and is identified as **Preset Speed #4**. The binary number is applied to **S1** – **S4** of the **Control Terminal Strip** to output the **Preset Speed** (see **F018** for further information on this parameter).

Direct Access Number — F021
Parameter Type — **Numerical**
Factory Default — **0.0**
Changeable During Run — **Yes**
Minimum — **Lower Limit** (**F013**)
Maximum — **Upper Limit** (**F012**)
Units — Hz

Preset Speed #5

Program ⇒ Pattern Run Control ⇒ Preset Speeds ⇒ **5**

This parameter assigns an output frequency to binary number 0101 and is identified as **Preset Speed #5**. The binary number is applied to **S1** – **S4** of the **Control Terminal Strip** to output the **Preset Speed** (see **F018** for further information on this parameter).

Direct Access Number — F022
Parameter Type — **Numerical**
Factory Default — **0.0**
Changeable During Run — **Yes**
Minimum — **Lower Limit** (**F013**)
Maximum — **Upper Limit** (**F012**)
Units — Hz

Preset Speed #6

Program ⇒ Pattern Run Control ⇒ Preset Speeds ⇒ **6**

This parameter assigns an output frequency to binary number 0110 and is identified as **Preset Speed #6**. The binary number is applied to **S1** – **S4** of the **Control Terminal Strip** to output the **Preset Speed** (see **F018** for further information on this parameter).

Direct Access Number — F023
Parameter Type — **Numerical**
Factory Default — **0.0**
Changeable During Run — **Yes**
Minimum — **Lower Limit** (**F013**)
Maximum — **Upper Limit** (**F012**)
Units — Hz

Preset Speed #7

Program ⇒ Pattern Run Control ⇒ Preset Speeds ⇒ **7**

This parameter assigns an output frequency to binary number 0111 and is identified as **Preset Speed #7**. The binary number is applied to **S1** – **S4** of the **Control Terminal Strip** to output the **Preset Speed** (see **F018** for further information on this parameter).

Direct Access Number — F024
Parameter Type — **Numerical**
Factory Default — **0.0**
Changeable During Run — **Yes**
Minimum — **Lower Limit** (**F013**)
Maximum — **Upper Limit** (**F012**)
Units — Hz

Low Speed Signal Output Frequency

Program ⇒ Terminal Selection Parameters ⇒ **Reach Settings**

The **Low Speed Signal Output Frequency** parameter sets a frequency threshold that activates the assigned output terminal so long as the ASD output is at or above this setting (see Table 9 on pg. 81 for the available output assignments).

Direct Access Number — F100
Parameter Type — **Numerical**
Factory Default — **0.0**
Changeable During Run — **Yes**
Minimum — 0.0
Maximum — **Max. Freq.** (**F011**)
Units — Hz

Speed Reach Frequency

Program ⇒ Terminal Selection Parameters ⇒ **Reach Settings**

The **Speed Reach Frequency** sets a frequency threshold that, when reached or is within the bandwidth specified by parameter **F102**, will provide a signal at an output terminal that can close an appropriately configured output contact (see Table 9 on pg. 81 for the available output assignments).

Direct Access Number — F101

Parameter Type — **Numerical**

Factory Default — **0.0**

Changeable During Run — **Yes**

Minimum — 0.0

Maximum — **Max. Freq.** (**F011**)

Units — Hz

Speed Reach Frequency Tolerance

Program ⇒ Terminal Selection Parameters ⇒ **Reach Settings**

This parameter sets the bandwidth of the **Speed Reach Frequency** (**F101**) setting.

Direct Access Number — F102

Parameter Type — **Numerical**

Factory Default — **2.5**

Changeable During Run — **Yes**

Minimum — 0.0

Maximum — **Max. Freq.** (**F011**)

Units — Hz

ST Signal Selection

Direct Access Number — F103

Program ⇒ Terminal Selection Parameters ⇒ **Input Special Functions**

Parameter Type — **Selection List**

Factory Default — **ST – CC Required**

Changeable During Run — **No**

This parameter is used to set the operation of the **Standby** (**ST**) control terminal or any terminal configured as the **ST** terminal.

Settings:

ST-to-CC Required
ST-to-CC Not Required
Interlock with F/R Terminal

The setting **ST-to-CC Required** enables the ASD for operation so long as the control terminal **ST** is connected to **CC** via a jumper, contact, or other means.

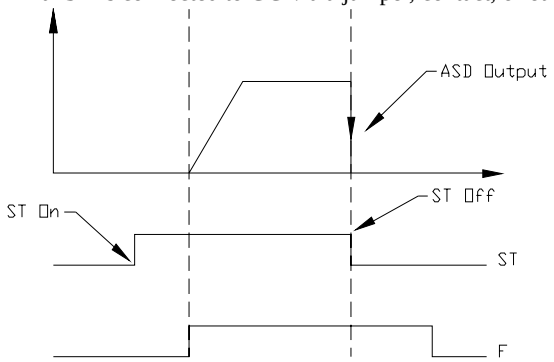

The **ST-to-CC Not Required** setting allows the ASD to operate without the **ST**-to-**CC** connection. The control terminal **ST** may be configured for other functions.

The **Interlock with F/R Terminal** setting configures the **F** (**Forward**) and **R** (**Reverse**) control terminals for the secondary function of **Standby**. Closing a set of contacts to either **F** or **R** will cause the ASD to accelerate the motor to the programmed setpoint of **F** or **R**. Opening the **F** and **R** contact will disable the ASD and the motor will coast to a stop. The control terminal **ST** may be configured for other functions.

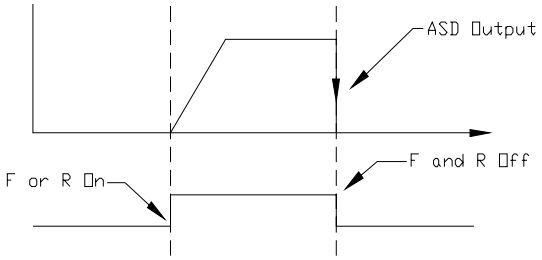

R/F Priority Selection

Direct Access Number — F105

Program ⇒ Terminal Selection Parameters ⇒ **Input Special Functions**

Parameter Type — **Selection List**

Factory Default — **Reverse**

Changeable During Run — **No**

The **R/F Priority Selection** determines the operation of the ASD if both the **R** and **F** control terminals are activated.

Settings:

Reverse
Suspend

The waveforms below depict the motor response for all combinations of the **F** and **R** terminal settings if the **Reverse** option is chosen.

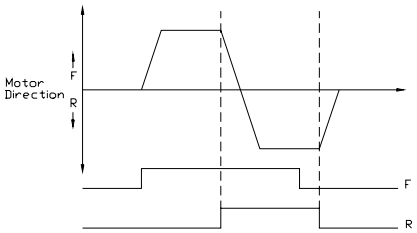

The **Suspend** setting will decelerate the motor to a stop regardless of the rotation direction when both the **F** and **R** control terminals are activated.

Input Terminal Priority

Program ⇒ Terminal Selection Parameters ⇒ **Input Special Functions**

Direct Access Number — F106

Parameter Type — **Check Box**

Factory Default — **Disabled**

Changeable During Run — **No**

This parameter is used to allow the **Jog** and **DC Injection Braking** input signals to control the ASD when received via the **Control Terminal Strip** even though the system is in the **Local** mode.

With this parameter enabled**,** a **Jog** command or a **DC Injection Braking** command received from the **Control Terminal Strip** will receive priority over commands from the **EOI**.

See **F260** for further information on using the **Jog** function.

See **F250** – **F252** for further information on **DC Injection Braking**.

Settings:

Enabled (Box checked)
Disabled

Extended Terminal Function

Program ⇒ Terminal Selection Parameters ⇒ **Input Special Functions**

Direct Access Number — F107

Parameter Type — **Selection List**

Factory Default — **None**

Changeable During Run — **No**

The **Extended Terminal Function** is used with the optional **ASD-Multicom** card only. This parameter defines the format of the binary or BCD data when using the option card.

Settings:

None
12-Bit Binary
16-Bit Binary
3-Digit BCD
4-Digit BCD
Reverse 12-Bit Binary
Reverse 16-Bit Binary
Reverse 3-Digit BCD
Reverse 4-Digit BCD

Selections using 16-bit binary or 4-digit BCD will require the configuration of terminals S1-S4 on the **Control Terminal Strip** as binary bits 0 – 3 (**F115** – **F118**). The **Frequency Mode #1 Selection** (**F004**) must be set to **Use Binary/ BCD Input**.

For proper scaling of the binary or BCD input, parameters **F228 – F231** must be configured [**BIN Reference Point #1**, **BIN Reference #1 (frequency)**, **Bin Reference Point #2**, and **BIN Reference #2 (frequency)**].

Motorized Pot Frequency at Power Down

Program ⇒ Frequency Setting Parameters ⇒ **Motorized Pot Settings**

Direct Access Number — F108

Parameter Type — **Selection List**

Factory Default — **Erase**

Changeable During Run — **No**

When the **Frequency Mode #1 Selection** (**F004**) setting is set to **Use MOP Function Simulation**, this parameter determines the outcome of the **Frequency Mode #1** setting at powerdown or stop.

Settings:

Erase
Store

If **Erase** is selected, the ASD will **not** store the frequency setpoint and establishes a setpoint of 0.0 Hz when restarted.

If **Store** is selected, the ASD will maintain the current frequency setpoint in memory while stopped, during fault conditions, or when power is removed. This setpoint will be used as the initial frequency setpoint when the ASD is restarted.

A control terminal configured as **MOP Frequency Clear** will establish a frequency setpoint of 0.0 Hz regardless of the **Motorized Pot Frequency at Power Down** setting.

ON Input Terminal Assignment

Program ⇒ Terminal Selection Parameters ⇒ Input Terminal Assignment ⇒ **ON**

Direct Access Number — F110

Parameter Type — **Selection List**

Factory Default — **Unassigned**

Changeable During Run — **No**

This parameter selects the functionality of the virtual input terminal **ON**. As a virtual terminal, the **ON** control terminal exists only in memory and is considered to always be in its **True** (or connected to **CC**) state.

It is often practical to assign this terminal to a function that the user desires to be maintained regardless of external conditions or operations.

This parameter sets the programmable **ON** terminal to 1 of the 68 possible functions that are listed in Table 8 on pg. 76.

F Input Terminal Assignment

Program ⇒ Terminal Selection Parameters ⇒ Input Terminal Assignment ⇒ **F**

Direct Access Number — F111

Parameter Type — **Selection List**

Factory Default — **Forward**

Changeable During Run — **No**

This parameter selects the functionality of the **F** input terminal.

In addition, the input terminal must be specified as **Normally Open** or **Normally Closed**.

This parameter sets the programmable **F** terminal to 1 of the 68 possible functions that are listed in Table 8 on pg. 76.

R Input Terminal Assignment

Program ⇒ Terminal Selection Parameters ⇒ Input Terminal Assignment ⇒ **R**

Direct Access Number — F112

Parameter Type — **Selection List**

Factory Default — **Reverse**

Changeable During Run — **No**

This parameter selects the functionality of the **R** input terminal.

In addition, the input terminal must be specified as **Normally Open** or **Normally Closed**.

This parameter sets the programmable **R** terminal to 1 of the 68 possible functions that are listed in Table 8 on pg. 76.

ST Input Terminal Assignment

Program ⇒ Terminal Selection Parameters ⇒ Input Terminal Assignment ⇒ **ST**

This parameter selects the functionality of the **ST** input terminal.

In addition, the input terminal must be specified as **Normally Open** or **Normally Closed**.

This parameter sets the programmable **ST** terminal to 1 of the 68 possible functions that are listed in Table 8 on pg. 76.

Direct Access Number — F113

Parameter Type — **Selection List**

Factory Default — **Standby**

Changeable During Run — **No**

RES Input Terminal Assignment

Program ⇒ Terminal Selection Parameters ⇒ Input Terminal Assignment ⇒ **RES**

This parameter selects the functionality of the **RES** input terminal.

In addition, the input terminal must be specified as **Normally Open** or **Normally Closed**.

This parameter sets the programmable **RES** terminal to 1 of the 68 possible functions that are listed in Table 8 on pg. 76.

Direct Access Number — F114

Parameter Type — **Selection List**

Factory Default — **Reset**

Changeable During Run — **No**

S1 Input Terminal Assignment

Program ⇒ Terminal Selection Parameters ⇒ Input Terminal Assignment ⇒ **S1**

This parameter selects the functionality of the **S1** input terminal.

In addition, the input terminal must be specified as **Normally Open** or **Normally Closed**.

This parameter sets the programmable **S1** terminal to 1 of the 68 possible functions that are listed in Table 8 on pg. 76.

Direct Access Number — F115

Parameter Type — **Selection List**

Factory Default — **Preset Speed Cmd #1**

Changeable During Run — **No**

S2 Input Terminal Assignment

Program ⇒ Terminal Selection Parameters ⇒ Input Terminal Assignment ⇒ **S2**

This parameter selects the functionality of the **S2** input terminal.

In addition, the input terminal must be specified as **Normally Open** or **Normally Closed**.

This parameter sets the programmable **S2** terminal to 1 of the 68 possible functions that are listed in Table 8 on pg. 76.

Direct Access Number — F116

Parameter Type — **Selection List**

Factory Default — **Preset Speed Cmd #2**

Changeable During Run — **No**

S3 Input Terminal Assignment

Program ⇒ Terminal Selection Parameters ⇒ Input Terminal Assignment ⇒ **S3**

This parameter selects the functionality of the **S3** input terminal.

In addition, the input terminal must be specified as **Normally Open** or **Normally Closed**.

This parameter sets the programmable **S3** terminal to 1 of the 68 possible functions that are listed in Table 8 on pg. 76.

Direct Access Number — F117

Parameter Type — **Selection List**

Factory Default — **Preset Speed Cmd #3**

Changeable During Run — **No**

S4 Input Terminal Assignment

Direct Access Number — F118

Parameter Type — **Selection List**

Factory Default — **Emergency Off**

Changeable During Run — **No**

Program ⇒ Terminal Selection Parameters ⇒ Input Terminal Assignment ⇒ **S4**

This parameter selects the functionality of the **S4** input terminal.

In addition, the input terminal must be specified as **Normally Open** or **Normally Closed**.

This parameter sets the programmable **S4** terminal to 1 of the 68 possible functions that are listed in Table 8 on pg. 76.

S5 Input Terminal Assignment

Direct Access Number — F119

Parameter Type — **Selection List**

Factory Default — **Unassigned**

Changeable During Run — **No**

Program ⇒ Terminal Selection Parameters ⇒ Input Terminal Assignment ⇒ **S5**

This parameter selects the functionality of the **S5** input terminal.

Note: *The **S5** input terminal may be used without the **ASD-Multicom** option board.*

*Without the **ASD-Multicom** option board the **S5** terminal assignment information will be stored in volatile memory. The terminal assignment information will be lost if the system is powered down or reset.*

In addition, the input terminal must be specified as **Normally Open** or **Normally Closed**.

This parameter sets the programmable **S5** terminal to 1 of the 68 possible functions that are listed in Table 8 on pg. 76.

S6 Input Terminal Assignment

Direct Access Number — F120

Parameter Type — **Selection List**

Factory Default — **Unassigned**

Changeable During Run — **No**

Program ⇒ Terminal Selection Parameters ⇒ Input Terminal Assignment ⇒ **S6**

This parameter selects the functionality of the **S6** input terminal.

Note: *The **S6** input terminal may be used without the **ASD-Multicom** option board.*

*Without the **ASD-Multicom** option board the **S6** terminal assignment information will be stored in volatile memory. The terminal assignment information will be lost if the system is powered down or reset.*

In addition, the input terminal must be specified as **Normally Open** or **Normally Closed**.

This parameter sets the programmable **S6** terminal to 1 of the 68 possible functions that are listed in Table 8 on pg. 76.

S7 Input Terminal Assignment

Direct Access Number — F121

Parameter Type — **Selection List**

Factory Default — **Unassigned**

Changeable During Run — **No**

Program ⇒ Terminal Selection Parameters ⇒ Input Terminal Assignment ⇒ **S7**

This parameter selects the functionality of the **S7** input terminal.

Note: *The **S7** input terminal may be used without the **ASD-Multicom** option board.*

*Without the **ASD-Multicom** option board the **S7** terminal assignment information will be stored in volatile memory. The terminal assignment information will be lost if the system is powered down or reset.*

In addition, the input terminal must be specified as **Normally Open** or **Normally Closed**.

This parameter sets the programmable **S7** terminal to 1 of the 68 possible functions that are listed in Table 8 on pg. 76.

Input Terminal 12 Assignment

Direct Access Number — F122

Parameter Type — **Selection List**

Factory Default — **Unassigned**

Changeable During Run — **No**

Program ⇒ Terminal Selection Parameters ⇒ Input Terminal Assignment ⇒ **12**

This parameter selects the functionality of the **#12** input terminal.

Note: *The **#12** input terminal may be used without the **ASD-Multicom** option board.*

*Without the **ASD-Multicom** option board the **#12** terminal assignment information will be stored in volatile memory. The terminal assignment information will be lost if the system is powered down or reset.*

In addition, the input terminal must be specified as **Normally Open** or **Normally Closed**.

This parameter sets the programmable terminal **#12** to 1 of the 68 possible functions that are listed in Table 8 on pg. 76.

Input Terminal 13 Assignment

Direct Access Number — F123

Parameter Type — **Selection List**

Factory Default — **Unassigned**

Changeable During Run — **No**

Program ⇒ Terminal Selection Parameters ⇒ Input Terminal Assignment ⇒ **13**

This parameter selects the functionality of the **#13** input terminal.

Note: *The **#13** input terminal may be used without the **ASD-Multicom** option board.*

*Without the **ASD-Multicom** option board the **#13** terminal assignment information will be stored in volatile memory. The terminal assignment information will be lost if the system is powered down or reset.*

In addition, the input terminal must be specified as **Normally Open** or **Normally Closed**.

This parameter sets the programmable terminal **#13** to 1 of the 68 possible functions that are listed in Table 8 on pg. 76.

Input Terminal 14 Assignment

Direct Access Number — F124

Parameter Type — **Selection List**

Factory Default — **Unassigned**

Changeable During Run — **No**

Program ⇒ Terminal Selection Parameters ⇒ Input Terminal Assignment ⇒ **14**

This parameter selects the functionality of the **#14** input terminal.

Note: *The **#14** input terminal may be used without the **ASD-Multicom** option board.*

*Without the **ASD-Multicom** option board the **#14** terminal assignment information will be stored in volatile memory. The terminal assignment information will be lost if the system is powered down or reset.*

In addition, the input terminal must be specified as **Normally Open** or **Normally Closed**.

This parameter sets the programmable terminal **#14** to 1 of the 68 possible functions that are listed in Table 8 on pg. 76.

Input Terminal 15 Assignment

Direct Access Number — F125

Parameter Type — **Selection List**

Factory Default — **Unassigned**

Changeable During Run — **No**

Program ⇒ Terminal Selection Parameters ⇒ Input Terminal Assignment ⇒ **15**

This parameter selects the functionality of the **#15** input terminal.

Note: *The **#15** input terminal may be used without the **ASD-Multicom** option board.*

*Without the **ASD-Multicom** option board the **#15** terminal assignment information will be stored in volatile memory. The terminal assignment information will be lost if the system is powered down or reset.*

In addition, the input terminal must be specified as **Normally Open** or **Normally Closed**.

This parameter sets the programmable terminal **#15** to 1 of the 68 possible functions that are listed in Table 8 on pg. 76.

Input Terminal 16 Assignment

Direct Access Number — F126

Parameter Type — **Selection List**

Factory Default — **Unassigned**

Changeable During Run — **No**

Program ⇒ Terminal Selection Parameters ⇒ Input Terminal Assignment ⇒ **16**

This parameter selects the functionality of the **#16** input terminal.

Note: *The **#16** input terminal may be used without the **ASD-Multicom** option board.*

*Without the **ASD-Multicom** option board the **#16** terminal assignment information will be stored in volatile memory. The terminal assignment information will be lost if the system is powered down or reset.*

In addition, the input terminal must be specified as **Normally Open** or **Normally Closed**.

This parameter sets the programmable terminal **#16** to 1 of the 68 possible functions that are listed in Table 8 on pg. 76.

Table 8 . Discrete Input Terminal Assignment Selections and Descriptions.

0 — **Unassigned** — No operation.
1 — **F** — Enables **Forward** operation commands.
2 — **R** — Enables **Reverse** operation commands.
3 — **ST** — Enables the **Forward** and **Reverse** operation commands (maybe disabled at **F103**).
4 — **RES** — Resets the device and any incurred faults.
5 — **S1** —**Preset Speed Command 1** is used as the **LSB** of the 4-bit nibble that is used to select a **Preset Speed**.
6 — **S2** — **Preset Speed Command 2** is used as the second bit of the 4-bit nibble that is used to select a **Preset Speed**.
7 — **S3** — **Preset Speed Command 3** is used as the third bit of the 4-bit nibble that is used to select a **Preset Speed**.
8 — **S4** — **Preset Speed Command 4** is used as the **MSB** of the 4-bit nibble that is used to select a **Preset Speed**.
9 — **Jog** — **Jog** is the term used to describe turning on the motor for small increments of time and is used when precise positioning of motor-driven equipment is required. This terminal activates a **Jog** for the duration of activation. The **Jog** settings may be configured at **F260** and **F261**.
10 — **Emergency Off** — Terminates the output signal from the drive and may apply a brake. The braking method may be selected at **F603**.
11 — **DC Braking** — The drive outputs a DC current that is injected into the windings of the motor to quickly brake the motor.
12 — **Accel/Decel 1, 2 Switching** — **Acceleration** and **Deceleration** control may be switched between the **#1** profile to the **#2** profile if using a multiple-accel/decel profile configuration.
13 — **Accel/Decel 3, 4 Switching** — **Acceleration** and **Deceleration** control may be switched between the **#3** profile to the **#4** profile if using a multiple-accel/decel profile configuration.
14 — **Motor 1, 2 Switching** — Motor control may be switched between the **Motor #1** profile to the **Motor #2** profile if using a multiple-motor profile configuration.
15 — **Motor 3, 4 Switching** — Motor control may be switched between the **Motor #3** profile to the **Motor #4** profile if using a multiple-motor profile configuration.
16 — **Torque Limit 1, 2 Switching** — Torque control may be switched between the **Torque Limit #1** profile to the **Torque Limit #2** profile if using a multiple-profile configuration.
17 — **Torque Limit 3, 4 Switching** — Torque control may be switched between the **Torque Limit #3** profile to the **Torque Limit #4** profile if using a multiple-profile configuration.
18 — **PID Control Off** — Connecting this terminal to **CC** turns off **PID** control.
19 — **Pattern #1** — Connecting this terminal to **CC** initiates the **Pattern #1 Pattern Run**.
20 — **Pattern #2** — Connecting this terminal to **CC** initiates the **Pattern #2 Pattern Run**.
21 — **Pattern #3** — Connecting this terminal to **CC** initiates the **Pattern #3 Pattern Run**.
22 — **Pattern #4** — Connecting this terminal to **CC** initiates the **Pattern #4 Pattern Run**.
23 — **Pattern Continue** — Continues with the last **Pattern Run** from its stopping point when connected to **CC**.
24 — **Pattern Trigger** — This function is used to sequentially initiate each **Preset Speed** of a **Pattern Run** with each connection to **CC**.
25 — **Forced Jog Forward** — This setting initiates a **Forced Forward Jog** when connected to **CC**. The **Forced Forward Jog** command provides a forward-run signal so long as this terminal is connected to **CC** (the status of the **F** and **R** terminals is ignored). Use **F260** to set the **Jog Frequency** and use **F261** to select the **Jog Stop Method**.
26 — **Forced Jog Reverse** — This setting initiates a **Forced Reverse Jog** when connected to **CC**. The **Forced Reverse Jog** command provides a reverse-run signal so long as this terminal is connected to **CC** (the status of the **F** and **R** terminals is ignored). Use **F260** to set the **Jog Frequency** and use **F261** to select the **Jog Stop Method**.
27 — **Binary Bit 0** — Bit 0 – 7 may be set up as a speed/torque control register. Speed/torque settings may be applied to this group of terminals in binary form. The required number of input terminals should be set to the respective binary bit settings (0 – MSB). The **Frequency Mode** setting must be set to **Use Binary/BCD input**. The gain and bias of the binary input may be set from the following path: Program ⇒ Frequency Setting Parameters ⇒ Speed Reference Setpoints ⇒ **BIN** (see **F228).**

Table 8 (Continued). Discrete Input Terminal Assignment Selections and Descriptions.

28 — **Binary Bit 1** — See selection 27 above.
29 — **Binary Bit 2** — See selection 27 above.
30 — **Binary Bit 3** — See selection 27 above.
31 — **Binary Bit 4** — See selection 27 above.
32 — **Binary Bit 5** — See selection 27 above.
33 — **Binary Bit 6** — See selection 27 above.
34 — **Binary Bit 7** — See selection 27 above.
35 — **Forced Stop** — Activating this terminal terminates the **Run** command regardless of the **Command Mode** setting and initiates the programmed stopping method.
36 — **Stop Key Emulation** — Activating this terminal terminates the **Run** command being received from communications devices and initiates the programmed stopping method.
37 — **Reserved** — No operation.
38 — **Reserved** — No operation.
39 — **Reserved** — No operation.
40 — **Reserved** — No operation.
41 — **Reserved** — No operation.
42 — **Reserved** — No operation.
43 — **Binary Data Write** — This terminal serves two functions: 1) While operating in the **Use Binary/BCD input** mode, each momentary connection of this terminal to **CC** transfers the speed/torque **Binary Bit** (0 – MSB) settings to the motor. 2) The **Motorized Pot** frequency command will be saved during power down or reset by setting **F108** to **Store** and setting an input terminal to **43:binary Data Write**. If the drive is running and the **Binary Data Write** terminal is active when an event occurs (Fault, Power off), the **Motorized Pot** frequency command will be restored upon power-up or reset.
44 — **Motorized Pot Up** (MOP) — Momentarily connecting this terminal to **CC** causes an increase in motor speed for the duration of the connection until the **Upper Limit** is reached. The **Frequency Mode** setting must be set to **Motorized Pot. Simulation**. The MOP acceleration rate is determined by the **F500** setting.
45 — **Motorized Pot Down** (MOP) — Momentarily connecting this terminal to **CC** causes a decrease in motor speed for the duration of the connection until the **Lower Limit** is reached. The **Frequency Mode** setting must be set to **Motorized Pot. Simulation**. The MOP deceleration rate is determined by the **F501** setting.
46 — **Motorized Pot Clear** — Connecting this terminal to **CC** clears the last **Motorized Pot** frequency settings (see **F108** for further information on this setting).
47 — **Momentary Push Run** — When connected to **CC** this terminal setting starts the motor.
48 — **Momentary Push Stop** — When connected to **CC** this terminal setting stops the motor.
49 — **Forward/Reverse** — This setting operates in conjunction with another terminal being set to the **Run/Stop** (50) function. When configured to **Run** (**Run/Stop** to **CC**), the make or break of this connection to **CC** changes the direction of the motor.
50 — **Run/Stop** — This terminal enables the motor to run when connected to **CC** and disables the motor when the connection is broken.
51 — **Line Power Bypass** — This function operates in conjunction with the **Line Power Switching** frequency setting (**F355**). An enabled check box at Program ⇒ Terminal Selection Parameters ⇒ **Line Power Switching** (At) and this input terminal setting enables this function. Once configured (including this terminal connection to **CC**), the frequency setting of **Line Power Switching** (Hz) establishes the speed at which the drive terminates its output and routes commercial power to the motor.

Table 8 (Continued). Discrete Input Terminal Assignment Selections and Descriptions.

52 —	**Frequency Priority** — Connecting this terminal to **CC** allows for the frequency control to be switched from the frequency command source selected as **Frequency Mode #1** to **Frequency Mode #2**. This function is enabled by setting the **Reference Priority Selection** to **Frequency Source Priority Switching** and is located at Program ⇒ Fundamental Parameters ⇒ Standard Mode Selection ⇒ Reference Priority Selection ⇒ **Frequency Source Priority Switching**.
53 —	**VI/II Terminal Priority** — Connecting this terminal to **CC** assigns command control to the **VI/II Terminal** and overrides all other **Control Terminal Strip** input so long as the **Command Mode** is set to **Use Control Terminal Strip**.
54 —	**Command Control Terminal Strip Priority** — Connecting this terminal to **CC** overrides the **FMOD** setting and assigns speed control to the **Control Terminal Strip**.
55 —	**Parameter Editing Enabling (LED)** — The **LED Keypad** system is unavailable at the time of this release.
56 —	**Control Switch (torque, position)** — This function allows for a system change from speed to torque or position as a function of the V/f setting when connected to **CC**.
57 —	**Deviation Counter Clear** — This function clears the **Deviation Counter** when operating in the **Position Control** mode.
58 —	**Position Control Forward Limit LS** — Connecting this terminal to **CC** will immediately stop the drive and hold its position. If the connection remains the drive will time out and trip. This function is normally used for over-travel conditions.
59 —	**Position Control Reverse Limit LS** — Connecting this terminal to **CC** will immediately stop the drive and hold its position. If the connection remains the drive will time out and trip. This function is normally used for over-travel conditions.
60 —	**Light-Load High-Speed Operation Enable** — Activating this terminal sets the lower limit of an output frequency range in which the **Light-load/High-speed** function may be used (see **F330**). The **Light-load/High-speed** function accelerates the output frequency of the ASD to the speed setting established in **F341** for the duration of the activation.
61 —	**Snap Stop Control Enable** — TBD.
62 —	**Pre-excite Motor** — Connecting this terminal to **CC** applies an excitation current to the motor (holds shaft stationary) for the duration of the connection.
63 —	**System Consistent Sequence** (BC: braking command) — TBD.
64 —	**System Consistent Sequence** (B: braking release) — Connecting this input terminal to **CC** initiates the brake release command. This setting requires that another discrete input terminal be set to **65** [**System Consistent Sequence** (BA: braking answer)] to complete the brake release command and to convey the status of the braking system to the user or to a dependent subsystem. Once the braking release function is initiated, the **Trouble Internal Timer** begins to count down (**Trouble Internal Timer** value is set at **F630**). Should the count-down timer expire before the brake releases or before the **Braking Answer** is returned, fault **E-11**will occur. Otherwise, the brake releases the motor and normal motor operations resume. The **Braking Release** function is primarily used at startup; but, may be used when the brake is applied while the motor is running.
65 —	**System Consistent Sequence** (BA: braking answer) — This setting is required when the **Braking Release** (**64**) function is used. The function of this input terminal is to receive the returned the status of the braking system. The returned status is either **Released** or **Not Released**. If **Released** is returned within the time setting of **F630**, normal system function resumes. If **Not Released** is returned or if the **F630** time setting times out before either signal is returned, then fault **E-11** occurs. The returned signal may also be used to notify the user or control a dependent subsystem.
66 —	**System Consistent Sequence** (BT: braking test) — TBD.
67 —	**Output Frequency Hold** — TBD.

OUT1 Output Terminal Assignment

Program ⇒ Terminal Selection Parameters ⇒ Output Terminal Assignment ⇒ **OUT1**

This parameter sets the functionality of the **OUT1** (**A** & **C**) output terminals to 1 of the 60 possible functions that are listed in Table 9 on pg. 81.

The on and off delay times of the **OUT1** terminals may be adjusted to provide more response time to the device that is connected to the output terminals.

In addition, the output terminals must be specified as **Normally Open** or **Normally Closed**.

Direct Access Number — F130

Parameter Type — **Selection List**

Factory Default — **Low**

Changeable During Run — **No**

OUT2 Output Terminal Assignment

Program ⇒ Terminal Selection Parameters ⇒ Output Terminal Assignment ⇒ **OUT2**

This parameter sets the functionality of the **OUT2** (**A** & **C**) output terminals to 1 of the 60 possible functions that are listed in Table 9 on pg. 81.

The on and off delay times of the **OUT2** terminals may be adjusted to provide more response time to the device that is connected to the output terminals.

In addition, the output terminals must be specified as **Normally Open** or **Normally Closed**.

Direct Access Number — F131

Parameter Type — **Selection List**

Factory Default — **RCH (Acc/Dec Complete)**

Changeable During Run — **No**

FL Output Terminal Assignment

Program ⇒ Terminal Selection Parameters ⇒ Output Terminal Assignment ⇒ **FL**

This parameter sets the functionality of the **FL** output terminals to 1 of the 60 possible functions that are listed in Table 9 on pg. 81.

The on and off delay times of the **FL** terminals may be adjusted to provide more response time to the device that is connected to the output terminals.

In addition, the output terminals must be specified as **Normally Open** or **Normally Closed**.

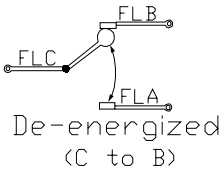

Direct Access Number — F132

Parameter Type — **Selection List**

Factory Default — **Fault (All)**

Changeable During Run — **No**

Output #4 Terminal Assignment

Program ⇒ Terminal Selection Parameters ⇒ Output Terminal Assignment ⇒ **4**

This parameter sets the functionality of the **OUT4** terminals to 1 of the 60 possible functions that are listed in Table 9 on pg. 81.

The on and off delay times of the **OUT4** terminals may be adjusted to provide more response time to the device that is connected to the output terminals.

In addition, the output terminals must be specified as **Normally Open** or **Normally Closed**.

Direct Access Number — F133

Parameter Type — **Selection List**

Factory Default — **LL**

Changeable During Run — **No**

OUT5 Terminal Assignment

Program ⇒ Terminal Selection Parameters ⇒ Output Terminal Assignment ⇒ **5**

This parameter sets the functionality of the **OUT5** terminals to 1 of the 60 possible functions that are listed in Table 9 on pg. 81.

The on and off delay times of the **OUT5** terminals may be adjusted to provide more response time to the device that is connected to the output terminals.

In addition, the output terminals must be specified as **Normally Open** or **Normally Closed**.

Direct Access Number — F134

Parameter Type — **Selection List**

Factory Default — **UL**

Changeable During Run — **No**

OUT6 Terminal Assignment

Program ⇒ Terminal Selection Parameters ⇒ Output Terminal Assignment ⇒ **6**

This parameter sets the functionality of the **OUT6** terminals to 1 of the 60 possible functions that are listed in Table 9 on pg. 81.

The on and off delay times of the **OUT6** terminals may be adjusted to provide more response time to the device that is connected to the output terminals.

In addition, the output terminals must be specified as **Normally Open** or **Normally Closed**.

Direct Access Number — F135

Parameter Type — **Selection List**

Factory Default — **RCH (Specified Speed)**

Changeable During Run — **No**

OUT7 Terminal Assignment

Program ⇒ Terminal Selection Parameters ⇒ Output Terminal Assignment ⇒ **7**

This parameter sets the functionality of the **OUT7** terminals to 1 of the 60 possible functions that are listed in Table 9 on pg. 81.

The on and off delay times of the **OUT7** terminals may be adjusted to provide more response time to the device that is connected to the output terminals.

In addition, the output terminals must be specified as **Normally Open** or **Normally Closed**.

Direct Access Number — F136

Parameter Type — **Selection List**

Factory Default — **Overcurrent Prealarm**

Changeable During Run — **No**

F Input Terminal Delay

Program ⇒ Terminal Selection Parameters ⇒ Input Terminal Delays ⇒ **F**

This parameter delays the response of the ASD to any change in the **F** terminal input by the programmed value.

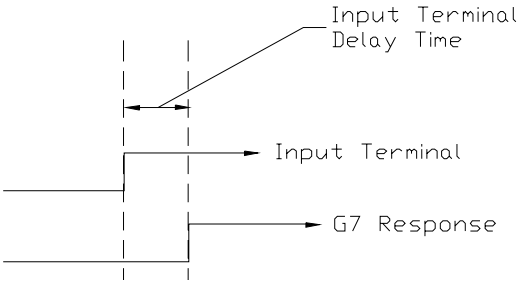

The delay may be increased to provide additional electrical noise immunity or to prevent the ASD from responding to contact bounce or chatter.

Direct Access Number — F140

Parameter Type — **Numerical**

Factory Default — **8.0**

Changeable During Run — **No**

Minimum — 2.0

Maximum — 200.0

Units — mS

Table 9. Discrete Output Terminal Assignment Selections.

	Function		Function
0	Lower Limit (LL)	31	Ready for Operation (including **ST** and **RUN**)
1	Upper Limit (UL)	32	Ready for Operation
2	Low (speed setting of **F100**)	33	POFF Alarm (poor control power supply)
3	RCH (Acc/Dec completion)	34	System Consistent Sequence (BR: brake release)
4	RCH (speed specified at **F101**)	35	In Alarm Status
5	Fault FL (all)	36	Forward Speed Limit (torque control)
6	Fault FL (except EF or OCL)	37	Reverse Speed Limit (torque control)
7	Overcurrent Pre-alarm	38	ASD Healthy Output
8	ASD Overload Pre-alarm	39	Abnormal Communication Alarm 2 (internal cause)
9	Motor Pre-alarm	40	Error Code Output 1 (6-bit error output)
10	Overheat Pre-alarm	41	Error Code Output 2 (6-bit error output)
11	Overvoltage Pre-alarm	42	Error Code Output 3 (6-bit error output)
12	DC Voltage Low Alarm	43	Error Code Output 4 (6-bit error output)
13	Low-current Alarm	44	Error Code Output 5 (6-bit error output)
14	Overtorque Alarm	45	Error Code Output 6 (6-bit error output)
15	Braking Resistor Overload Pre-alarm	46	Designated Data Output 1 (7-bit transmission output)
16	In Emergency Off	47	Designated Data Output 2 (7-bit transmission output)
17	Retrying	48	Designated Data Output 3 (7-bit transmission output)
18	Pattern Operation Switching Out	49	Designated Data Output 4 (7-bit transmission output)
19	PID Deviation Limit	50	Designated Data Output 5 (7-bit transmission output)
20	Start/Stop	51	Designated Data Output 6 (7-bit transmission output)
21	Serious Fault (OCA, OCL, EF, Lost Phase, Short Circuit, or Abnormal Output)	52	Designated Data Output 7 (7-bit transmission output)
22	Light Fault (OL, OC1, 2, 3, OP)	53	Light Load Detection Signal
23	Bypass Output #1	54	Heavy Load Detection Signal
24	Bypass Output #2	55	Positive Torque Limit
25	Fan On/Off	56	Negative Torque Limit
26	Jogging	57	External Rush Suppression Relay Output
27	Control Terminal Strip Operation Command Mode	58	Over Travel
28	Total-operation-hours Alarm	59	Positioning Completion
29	Abnormal Communication Alarm (external cause)	60	Earth Fault Alarm
30	Forward/Reverse Operation	61	Low Output Disable Alarm

R Input Terminal Delay

Program ⇒ Terminal Selection Parameters ⇒ Input Terminal Delays ⇒ **R**

This parameter delays the response of the drive to any change in the **R** terminal input by the programmed value (see waveforms at **F140**).

The delay may be increased to provide additional electrical noise immunity or to prevent the ASD from responding to contact bounce or chatter.

Direct Access Number — F141
Parameter Type — **Numerical**
Factory Default — **8.0**
Changeable During Run — **No**
Minimum — 2.0
Maximum — 200.0
Units — mS

ST Input Terminal Delay

Program ⇒ Terminal Selection Parameters ⇒ Input Terminal Delays ⇒ **ST**

This parameter delays the response of the drive to any change in the **ST** terminal input by the programmed value (see waveforms at **F140**).

The delay may be increased to provide additional electrical noise immunity or to prevent the ASD from responding to contact bounce or chatter.

Direct Access Number — F142
Parameter Type — **Numerical**
Factory Default — **8.0**
Changeable During Run — **No**
Minimum — 2.0
Maximum — 200.0
Units — mS

RES Input Terminal Delay

Program ⇒ Terminal Selection Parameters ⇒ Input Terminal Delays ⇒ **RES**

This parameter delays the response of the drive to any change in the **RES** terminal input by the programmed value (see waveforms at **F140**).

The delay may be increased to provide additional electrical noise immunity or to prevent the ASD from responding to contact bounce or chatter.

Direct Access Number — F143
Parameter Type — **Numerical**
Factory Default — **8.0**
Changeable During Run — **No**
Minimum — 2.0
Maximum — 200.0
Units — mS

S1 – S4 Input Terminal Delay

Program ⇒ Terminal Selection Parameters ⇒ Input Terminal Delays ⇒ **S1 – S4**

This parameter delays the response of the drive to any change in the **S1 – S4** terminal input by the programmed value (see waveforms at **F140**).

The delay may be increased to provide additional electrical noise immunity or to prevent the ASD from responding to contact bounce or chatter.

Direct Access Number — F144
Parameter Type — **Numerical**
Factory Default — **8.0**
Changeable During Run — **No**
Minimum — 2.0
Maximum — 200.0
Units — mS

S5 – S16 Input Terminal Delay

Program ⇒ Terminal Selection Parameters ⇒ Input Terminal Delays ⇒ **S5 – S16**

This parameter delays the response of the drive to any change in the **S5 – S16** terminal input by the programmed value (see waveforms at **F140**).

The delay may be increased to provide additional electrical noise immunity or to prevent the ASD from responding to contact bounce or chatter.

Direct Access Number — F145
Parameter Type — **Numerical**
Factory Default — **8.0**
Changeable During Run — **No**
Minimum — 2.0
Maximum — 200.0
Units — mS

OUT1 On Delay

Program ⇒ Terminal Selection Parameters ⇒ Output Terminal Delays ⇒ **OUT1**

Once the condition is met to close the **OUT1** (**A** & **C**) output terminals, this parameter delays the closing of the terminals by the programmed value.

For example, if the **OUT1** function is programmed as **Overtorque Alarm**, **OUT1** will close 2.0 mS (the default value for **OUT1 On Delay**) after the overtorque condition occurs.

The delay may be increased to prevent relay chatter.

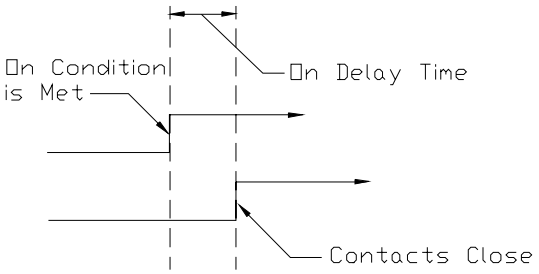

Direct Access Number — F150

Parameter Type — **Numerical**

Factory Default — **2.0**

Changeable During Run — **No**

Minimum — 2.0

Maximum — 200.0

Units — mS

OUT2 On Delay

Program ⇒ Terminal Selection Parameters ⇒ Output Terminal Delays ⇒ **OUT2**

This parameter delays the closing of the **OUT2** (**A** & **C**) output terminals by the programmed value (see waveforms at **F150**).

The delay may be increased to prevent relay chatter.

Direct Access Number — F151

Parameter Type — **Numerical**

Factory Default — **2.0**

Changeable During Run — **No**

Minimum — 2.0

Maximum — 200.0

Units — mS

FL On Delay

Program ⇒ Terminal Selection Parameters ⇒ Output Terminal Delays ⇒ **FL**

This parameter delays the closing of the **FL** output terminals by the programmed value (see waveforms at **F150**).

The delay may be increased to prevent relay chatter.

Direct Access Number — F152

Parameter Type — **Numerical**

Factory Default — **2.0**

Changeable During Run — **No**

Minimum — 2.0

Maximum — 200.0

Units — mS

OUT4 On Delay

Program ⇒ Terminal Selection Parameters ⇒ Output Terminal Delays ⇒ **OUT4**

This parameter delays the closing of the **OUT4** output terminals by the programmed value (see waveforms at **F150**).

The delay may be increased to prevent relay chatter.

Direct Access Number — F153

Parameter Type — **Numerical**

Factory Default — **2.0**

Changeable During Run — **No**

Minimum — 2.0

Maximum — 200.0

Units — mS

OUT5 On Delay

Program ⇒ Terminal Selection Parameters ⇒ Output Terminal Delays ⇒ **OUT5**

This parameter delays the closing of the **OUT5** output terminals by the programmed value (see waveforms at **F150**).

The delay may be increased to prevent relay chatter.

Direct Access Number — F154

Parameter Type — **Numerical**

Factory Default — **2.0**

Changeable During Run — **No**

Minimum — 2.0

Maximum — 200.0

Units — mS

OUT6 On Delay

Program ⇒ Terminal Selection Parameters ⇒ Output Terminal Delays ⇒ **OUT6**

This parameter delays the closing of the **OUT6** output terminals by the programmed value (see waveforms at **F150**).

The delay may be increased to prevent relay chatter.

Direct Access Number — F155

Parameter Type — **Numerical**

Factory Default — **2.0**

Changeable During Run — **No**

Minimum — 2.0

Maximum — 200.0

Units — mS

OUT7 On Delay

Program ⇒ Terminal Selection Parameters ⇒ Output Terminal Delays ⇒ **OUT7**

This parameter delays the closing of the **OUT7** output terminals by the programmed value (see waveforms at **F150**).

The delay may be increased to prevent relay chatter.

Direct Access Number — F156

Parameter Type — **Numerical**

Factory Default — **2.0**

Changeable During Run — **No**

Minimum — 2.0

Maximum — 200.0

Units — mS

OUT1 Off Delay

Program ⇒ Terminal Selection Parameters ⇒ Output Terminal Delays ⇒ **OUT1**

This parameter delays the opening of the **OUT1** (**A** & **C**) output terminals by the programmed value.

The delay may be increased to allow the devices that are connected to **OUT1** to respond.

Direct Access Number — F160

Parameter Type — **Numerical**

Factory Default — **2.0**

Changeable During Run — **No**

Minimum — 2.0

Maximum — 200.0

Units — mS

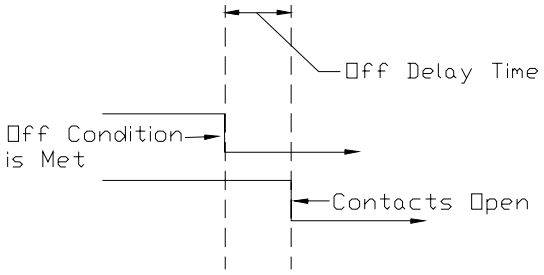

OUT2 Off Delay

Program ⇒ Terminal Selection Parameters ⇒ Output Terminal Delays ⇒ **OUT2**

This parameter delays the opening of the **OUT2** (**A** & **C**) output terminals by the programmed value (see waveforms at **F160**).

The delay may be increased to allow the devices that are connected to **OUT2** to respond.

Direct Access Number — F161

Parameter Type — **Numerical**

Factory Default — **2.0**

Changeable During Run — **No**

Minimum — 2.0

Maximum — 200.0

Units — mS

FL Off Delay

Program ⇒ Terminal Selection Parameters ⇒ Output Terminal Delays ⇒ **FL**

This parameter delays the opening of the **FL** output terminals by the programmed value (see waveforms at **F160**).

The delay may be increased to allow the devices that are connected to **FL** to respond.

Direct Access Number — F162

Parameter Type — **Numerical**

Factory Default — **2.0**

Changeable During Run — **No**

Minimum — 2.0

Maximum — 200.0

Units — mS

OUT4 Off Delay

Program ⇒ Terminal Selection Parameters ⇒ Output Terminal Delays ⇒ **OUT4**

This parameter delays the opening of the **OUT4** output terminals by the programmed value (see waveforms at **F160**).

The delay may be increased to allow the devices that are connected to **OUT4** to respond.

Direct Access Number — F163
Parameter Type — **Numerical**
Factory Default — **2.0**
Changeable During Run — **No**
Minimum — 2.0
Maximum — 200.0
Units — mS

OUT5 Off Delay

Program ⇒ Terminal Selection Parameters ⇒ Output Terminal Delays ⇒ **OUT5**

This parameter delays the opening of the **OUT5** output terminals by the programmed value (see waveforms at **F160**).

The delay may be increased to allow the devices that are connected to **OUT5** to respond.

Direct Access Number — F164
Parameter Type — **Numerical**
Factory Default — **2.0**
Changeable During Run — **No**
Minimum — 2.0
Maximum — 200.0
Units — mS

OUT6 Off Delay

Program ⇒ Terminal Selection Parameters ⇒ Output Terminal Delays ⇒ **OUT6**

This parameter delays the opening of the **OUT6** output terminals by the programmed value (see waveforms at **F160**).

The delay may be increased to allow the devices that are connected to **OUT6** to respond.

Direct Access Number — F165
Parameter Type — **Numerical**
Factory Default — **2.0**
Changeable During Run — **No**
Minimum — 2.0
Maximum — 200.0
Units — mS

OUT7 Off Delay

Program ⇒ Terminal Selection Parameters ⇒ Output Terminal Delays ⇒ **OUT7**

This parameter delays the opening of the **OUT7** output terminals by the programmed value (see waveforms at **F160**).

The delay may be increased to allow the devices that are connected to **OUT7** to respond.

Direct Access Number — F166
Parameter Type — **Numerical**
Factory Default — **2.0**
Changeable During Run — **No**
Minimum — 2.0
Maximum — 200.0
Units — mS

Motor #2 Base Frequency

Program ⇒ Motor Parameters ⇒ **Motor Set #2**

The **Motor #2 Base Frequency** setting is the frequency at which the output voltage of the ASD reaches its maximum setting. The **#2 Maximum Output Voltage** is set at **F171**.

This parameter is used only when the parameters for motor set **#2** are configured and selected. Motor set **#2** may be selected by a properly configured input terminal.

For proper motor operation, the **Base Frequency** should be set for the name-plated frequency of the motor.

Direct Access Number — F170
Parameter Type — **Numerical**
Factory Default — **60.0**
Changeable During Run — **Yes**
Minimum — 25.0
Maximum — 299.0
Units — Hz

Motor #2 Max Output Voltage

Program ⇒ Motor Parameters ⇒ **Motor Set #2**

The **Motor #2 Maximum Output Voltage** is the **Motor #2** output voltage at the **Base Frequency** (**F170**). Regardless of the programmed value, the output voltage cannot be higher than the input voltage.

The actual output voltage will be influenced by the input voltage of the ASD and the **Supply Voltage Compensation** setting (**F307**).

This parameter is used only when the parameters for motor set **#2** are configured and selected. Motor set **#2** may be selected by a properly configured input terminal.

Direct Access Number — F171

Parameter Type — **Numerical**

Factory Default — **(ASD-dependent)**

Changeable During Run — **Yes**

Minimum — 0.0

Maximum — 600.0

Units — Volts

Motor #2 Torque Boost

Program ⇒ Motor Parameters ⇒ **Motor Set #2**

The **Motor #2 Torque Boost** function is used to increase the low frequency torque for high inertia loads by increasing the output voltage at frequencies below ½ of the **#2 Base Frequency** setting (**F170**).

See parameter **F016** (**Motor #1 Torque Boost**) for an explanation of torque boost.

This parameter is used only when the parameters for motor set **#2** are configured and selected. Motor set **#2** may be selected by a properly configured input terminal.

Direct Access Number — F172

Parameter Type — **Numerical**

Factory Default — **(ASD-dependent)**

Changeable During Run — **Yes**

Minimum — 0.0

Maximum — 30.0

Units — %

Electronic Thermal Protection #2

Program ⇒ Motor Parameters ⇒ **Motor Set #2**

The **Motor #2 Electronic Thermal Protection** parameter specifies the motor overload current level for motor set #2. This value is entered as either a percentage of the full load rating of the ASD or as the FLA of the motor.

The unit of measurement for this parameter may be set to **Amps** (V/A) or it may be set as a percentage of the ASD rating. The name-plated FLA of the motor may be entered directly when **Amps** is selected as the unit of measurement (see **F701** to change the display unit).

Electronic Thermal Protection settings (#1 – #4) will be displayed in **Amps** if the **EOI** display units are set to **V/A** rather than **%**.

Direct Access Number — F173

Parameter Type — **Numerical**

Factory Default — **100.0**

Changeable During Run — **Yes**

Minimum — 10.0

Maximum — 100.0

Units — %

Motor #3 Base Frequency

Program ⇒ Motor Parameters ⇒ **Motor Set #3**

The **Motor #3 Base Frequency** setting is the frequency at which the output voltage of the ASD reaches its maximum setting. The **Maximum Output Voltage** is set at **F175**.

This parameter is used only when the parameters for motor set **#3** are configured and selected. Motor set **#3** may be selected by a properly configured input terminal.

For proper motor operation, the **Base Frequency** should be set for the name-plated frequency of the motor.

Direct Access Number — F174

Parameter Type — **Numerical**

Factory Default — **60.0**

Changeable During Run — **Yes**

Minimum — 25.0

Maximum — 299.0

Units — Hz

Motor #3 Max Output Voltage

Program ⇒ Motor Parameters ⇒ **Motor Set #3**

The **Motor #3 Maximum Output Voltage** is the **Motor #3** output voltage at the **Base Frequency** (**F174**). Regardless of the programmed value, the output voltage cannot be higher than the input voltage.

The actual output voltage will be influenced by the input voltage of the ASD and the **Supply Voltage Compensation** setting (**F307**).

This parameter is used only when the parameters for motor set **#3** are configured and selected. Motor set **#3** may be selected by a properly configured input terminal.

Direct Access Number — F175

Parameter Type — **Numerical**

Factory Default — **(ASD-dependent)**

Changeable During Run — **Yes**

Minimum — 0.0

Maximum — 600.0

Units — Volts

Motor #3 Torque Boost

Program ⇒ Motor Parameters ⇒ **Motor Set #3**

The **Motor #3 Torque Boost** function is used to increase the low frequency torque for high inertia loads by increasing the output voltage at frequencies below ½ of the **#3 Base Frequency** setting (**F174**).

See parameter **F016** (**Motor #1 Torque Boost**) for an explanation of torque boost.

This parameter is used only when the parameters for motor set **#3** are configured and selected. Motor set #3 may be selected by a properly configured input terminal.

Direct Access Number — F176

Parameter Type — **Numerical**

Factory Default — **(ASD-dependent)**

Changeable During Run — **Yes**

Minimum — 0.0

Maximum — 30.0

Units — %

Electronic Thermal Protection #3

Program ⇒ Motor Parameters ⇒ **Motor Set #3**

The **Motor #3 Electronic Thermal Protection** parameter specifies the motor overload current level for motor set #3. This value is entered as either a percentage of the full load rating of the ASD or as the FLA of the motor.

The unit of measurement for this parameter may be set to **Amps** (V/A) or it may be set as a percentage of the ASD rating. The name-plated FLA of the motor may be entered directly when **Amps** is selected as the unit of measurement (see **F701** to change the display unit).

Electronic Thermal Protection settings (#1 – #4) will be displayed in **Amps** if the **EOI** display units are set to **V/A** rather than **%**.

Direct Access Number — F177

Parameter Type — **Numerical**

Factory Default — **100.0**

Changeable During Run — **Yes**

Minimum — 10.0

Maximum — 100.0

Units — %

Motor #4 Base Frequency

Program ⇒ Motor Parameters ⇒ **Motor Set #4**

The **Motor #4 Base Frequency** setting is the frequency at which the output voltage of the ASD reaches its maximum setting. The **Maximum Output Voltage** is set at **F179**.

This parameter is used only when the parameters for motor set **#4** are configured and selected. Motor set **#4** may be selected by a properly configured input terminal.

For proper motor operation, the **Base Frequency** should be set for the name-plated frequency of the motor.

Direct Access Number — F178

Parameter Type — **Numerical**

Factory Default — **60.0**

Changeable During Run — **Yes**

Minimum — 25.0

Maximum — 299.0

Units — Hz

Motor #4 Max Output Voltage

Program ⇒ Motor Parameters ⇒ **Motor Set #4**

The **Motor #3 Maximum Output Voltage** is the **Motor #4** output voltage at the **Base Frequency** (**F178**). Regardless of the programmed value, the output voltage cannot be higher than the input voltage.

The actual output voltage will be influenced by the input voltage of the ASD and the **Supply Voltage Compensation** setting (**F307**).

This parameter is used only when the parameters for motor set **#4** are configured and selected. Motor set **#4** may be selected by a properly configured input terminal.

Direct Access Number — F179

Parameter Type — **Numerical**

Factory Default — **(ASD-dependent)**

Changeable During Run — **Yes**

Minimum — 0.0

Maximum — 600.0

Units — Volts

Motor #4 Torque Boost

Program ⇒ Motor Parameters ⇒ **Motor Set #4**

The **Motor #4 Torque Boost** function is used to increase the low frequency torque for high inertia loads by increasing the output voltage at frequencies below ½ of the **#4 Base Frequency** setting (**F178**).

See parameter **F016** (**Motor #1 Torque Boost**) for an explanation of torque boost.

This parameter is used only when the parameters for motor set **#4** are configured and selected. Motor set #4 may be selected by a properly configured input terminal.

Direct Access Number — F180

Parameter Type — **Numerical**

Factory Default — **(ASD-dependent)**

Changeable During Run — **Yes**

Minimum — 0.0

Maximum — 30.0

Units — %

Electronic Thermal Protection #4

Program ⇒ Motor Parameters ⇒ **Motor Set #4**

The **Motor #4 Electronic Thermal Protection** parameter specifies the motor overload current level for motor set #4. This value is entered as either a percentage of the full load rating of the ASD or as the FLA of the motor.

The unit of measurement for this parameter may be set to **Amps** (V/A) or it may be set as a percentage of the ASD rating. The name-plated FLA of the motor may be entered directly when **Amps** is selected as the unit of measurement (see **F701** to change the display unit).

Electronic Thermal Protection settings (#1 – #4) will be displayed in **Amps** if the **EOI** display units are set to **V/A** rather than **%**.

Direct Access Number — F181

Parameter Type — **Numerical**

Factory Default — **100.0**

Changeable During Run — **Yes**

Minimum — 10.0

Maximum — 100.0

Units — %

V/f Adjustment Coefficient

Program ⇒ Special Control Parameters ⇒ Special Parameters ⇒ **V/f Adjustment Coefficient**

This parameter may be used in the **Constant Torque** or the **Variable Torque** modes only and should be adjusted gradually to improve the application-specific torque requirements. The **Torque Boost** setting (**F016**) may be adjusted to improve the low-frequency torque performance.

Note: *The **Torque Boost** setting should be adjusted gradually before attempting performance corrections using this parameter.*

Direct Access Number — F183

Parameter Type — **Numerical**

Factory Default — **32**

Changeable During Run — **Yes**

Minimum — 0

Maximum — 255

Custom V/f Five-Point Setting #1 Frequency

Program ⇒ Special Control Parameters ⇒ **V/f Five-Point Setting**

The **Custom V/f Five-Point Setting #1 Frequency** setting establishes the frequency that is to be associated with the voltage setting of **F191** (**Custom V/f Five-Point Setting #1 Voltage**).

The V/f five-point settings define a custom volts per hertz relationship for the startup output of the ASD.

To enable this function, set the **V/f Pattern** (**F015**) selection to **Custom V/f Curve**.

Custom V/f Curves may be useful in starting high inertia loads such as rotary drum vacuum filters.

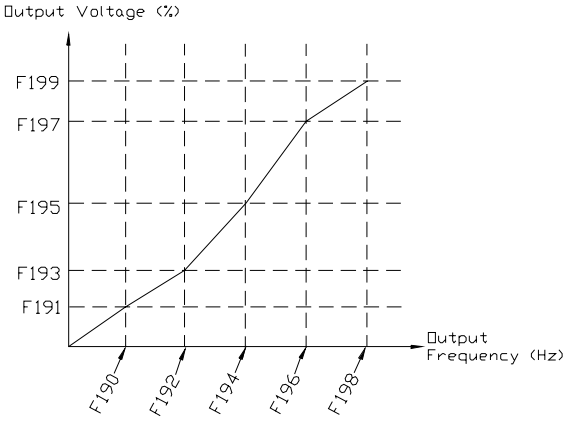

Direct Access Number — F190

Parameter Type — **Numerical**

Factory Default — **0.0**

Changeable During Run — **No**

Minimum — 0.0

Maximum — 299

Units — Hz

Custom V/f Five-Point Setting #1 Voltage

Program ⇒ Special Control Parameters ⇒ **V/f Five-Point Setting**

The **Custom V/f Five-Point Setting #1 Voltage** establishes the percentage of the output voltage that is to be associated with the frequency setting of **F190** (**Custom V/f Five-Point Setting #1 Frequency**).

See **F190** for additional information on custom V/f curves.

Direct Access Number — F191

Parameter Type — **Numerical**

Factory Default — **0.00**

Changeable During Run — **No**

Minimum — 0.0

Maximum — 100.0

Units — %

Custom V/f Five-Point Setting #2 Frequency

Program ⇒ Special Control Parameters ⇒ **V/f Five-Point Setting**

The **Custom V/f Five Point Setting #2 Frequency** sets the frequency to be associated with parameter **F193** (**Custom V/f Five Point Setting #2 Voltage**).

See **F190** for additional information on custom V/f curves.

Direct Access Number — F192

Parameter Type — **Numerical**

Factory Default — **0.0**

Changeable During Run — **No**

Minimum — 0.0

Maximum — 299

Units — Hz

Custom V/f Five-Point Setting #2 Voltage

Program ⇒ Special Control Parameters ⇒ **V/f Five-Point Setting**

The **Custom V/f Five-Point Setting #2 Voltage** establishes the percentage of the output voltage that is to be associated with the frequency setting of **F192** (**Custom V/f Five Point Setting #2 Frequency**).

See **F190** for additional information on custom V/f curves.

Direct Access Number — F193

Parameter Type — **Numerical**

Factory Default — **0.0**

Changeable During Run — **No**

Minimum — 0.0

Maximum — 100.0

Units — %

Custom V/f Five-Point Setting #3 Frequency

Program ⇒ Special Control Parameters ⇒ **V/f Five-Point Setting**

The **Custom V/f Five Point Setting #3 Frequency** sets the frequency to be associated with parameter **F195** (**Custom V/f Five Point Setting #3 Voltage**).

See **F190** for additional information on custom V/f curves.

Direct Access Number — F194
Parameter Type — **Numerical**
Factory Default — **0.0**
Changeable During Run — **No**
Minimum — 0.0
Maximum — 299
Units — Hz

Custom V/f Five-Point Setting #3 Voltage

Program ⇒ Special Control Parameters ⇒ **V/f Five-Point Setting**

The **Custom V/f Five-Point Setting #3 Voltage** establishes the percentage of the output voltage that is to be associated with the frequency setting of **F194** (**Custom V/f Five Point Setting #3 Frequency**).

See **F190** for additional information on custom V/f curves.

Direct Access Number — F195
Parameter Type — **Numerical**
Factory Default — **0.0**
Changeable During Run — **No**
Minimum — 0.0
Maximum — 100.0
Units — %

Custom V/f Five-Point Setting #4 Frequency

Program ⇒ Special Control Parameters ⇒ **V/f Five-Point Setting**

The **Custom V/f Five Point Setting #4 Frequency** sets the frequency to be associated with parameter **F197** (**Custom V/f Five Point Setting #4 Voltage**).

See **F190** for additional information on custom V/f curves.

Direct Access Number — F196
Parameter Type — **Numerical**
Factory Default — **0.0**
Changeable During Run — **No**
Minimum — 0.0
Maximum — 299
Units — Hz

Custom V/f Five-Point Setting #4 Voltage

Program ⇒ Special Control Parameters ⇒ **V/f Five-Point Setting**

The **Custom V/f Five-Point Setting #4 Voltage** establishes the percentage of the output voltage that is to be associated with the frequency setting of **F196** (**Custom V/f Five Point Setting #4 Frequency**).

See **F190** for additional information on custom V/f curves.

Direct Access Number — F197
Parameter Type — **Numerical**
Factory Default — **0.0**
Changeable During Run — **No**
Minimum — 0.0
Maximum — 100.0
Units — %

Custom V/f Five-Point Setting #5 Frequency

Program ⇒ Special Control Parameters ⇒ **V/f Five-Point Setting**

The **Custom V/f Five Point Setting #5 Frequency** sets the frequency to be associated with parameter **F199** (**Custom V/f Five Point Setting #5 Voltage**).

See **F190** for additional information on custom V/f curves.

Direct Access Number — F198
Parameter Type — **Numerical**
Factory Default — **0.0**
Changeable During Run — **No**
Minimum — 0.0
Maximum — 299
Units — Hz

Custom V/f Five-Point Setting #5 Voltage

Program ⇒ Special Control Parameters ⇒ **V/f Five-Point Setting**

The **Custom V/f Five-Point Setting #5 Voltage** establishes the percentage of the output voltage that is to be associated with the frequency setting of **F198** (**Custom V/f Five Point Setting #5 Frequency**).

See **F190** for additional information on custom V/f curves.

Direct Access Number — F199
Parameter Type — **Numerical**
Factory Default — **0.0**
Changeable During Run — **No**
Minimum — 0.0
Maximum — 100.0
Units — %

Reference Priority Selection

Program ⇒ Fundamental Parameters ⇒ Standard Mode Selection ⇒ **Reference Priority Selection**

Direct Access Number — F200

Parameter Type — **Selection List**

Factory Default — **Frequency Source #1**

Changeable During Run — **Yes**

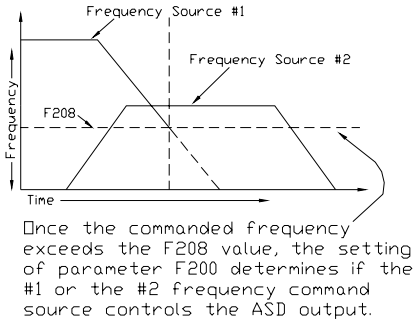

Either **Frequency Mode #1** or **Frequency Mode #2** may control the output frequency of the ASD. This parameter determines which of the two will control the output frequency and the conditions in which control will be switched from one to the other.

Settings:

- Frequency Source #1
- Frequency Source #2
- Frequency Source #1 Priority
- Frequency Source #2 Priority
- Frequency Source Priority Switching

The **Frequency Source #1** or **#2** setting specifies the source of the input frequency command signal. These settings are performed in **F004** and **F207**, respectively.

If **Frequency Source #1** is selected here, the ASD will follow the settings of **F004**. If **Frequency Source #2** is selected here, the ASD will follow the settings of **F207**.

The **Frequency Source #1 Priority** and **Frequency Source #2 Priority** selections are used in conjunction with the **Mode #1/#2 Switching Frequency** setting (**F208**). Parameter **F208** establishes a threshold frequency that will be used as a reference when determining when to switch output control between the **Frequency Mode #1** setting and the **Frequency Mode #2** setting.

If **Frequency Source #1 Priority** is selected here and the commanded frequency of **Frequency Source #1**exceeds the **F208** setting, the **Frequency Mode #1** setting has priority over the **Frequency Mode #2** setting.

If **Frequency Source #2 Priority** is selected here and the commanded frequency of **Frequency Source #2** exceeds the **F208** setting, the **Frequency Mode #2** setting has priority over **Frequency Mode #1** setting.

Frequency Source Priority Switching allows for a preconfigured input terminal to activate **Frequency Source #1** or **Frequency Source #2**. Any unused programmable discrete input terminals may be programmed as the **Frequency Priority** switching terminal.

VI/II Speed Reference Setpoint #1 (%)

Program ⇒ Frequency Setting Parameters ⇒ Speed Reference Setpoints ⇒ **VI/II**

Direct Access Number — F201

Parameter Type — **Numerical**

Factory Default — **20.0**

Changeable During Run — **Yes**

Minimum — 0.0

Maximum — 100.0%

Units — %

This parameter is used to set the gain and bias of the **VI/II** input terminals when either terminal is used as the control input while operating in the **Speed Control** or the **Torque Control** mode.

Note: *See note on pg. 46 for further information on the VI/II terminal.*

Perform the following setup to allow the system to receive control input at the **VI/II** terminals:

- Program ⇒ Fundamental Parameters ⇒ Standard Mode Selection ⇒ Command Mode ⇒ **Use Control Terminal Strip**.
- Program ⇒ Fundamental Parameters ⇒ Standard Mode Selection ⇒ Frequency Mode #1 ⇒ **Use VI/II**.
- Provide a **Run** command (**F** or **R**).

Gain and Bias Settings

When operating in the **Speed Control** mode, the settings that determine the gain and bias of the **VI/II** terminals are:

- **VI/II Speed Reference Setpoint #1 (frequency)** (**F202**),
- the **VI/II** input signal level that represents **VI/II Speed Reference Setpoint #1 (frequency)**: **F201**,
- **VI/II Speed Reference Setpoint #2 (frequency)** (**F204**), and
- the **VI/II** input signal level that represents **VI/II Speed Reference Setpoint #2 (frequency)**: **F203**.

When operating in the **Torque Control** mode, the settings that determine the gain and bias of the **VI/II** terminals are:

- **Torque Reference Setpoint #1 (%)** (**F205**),
- the **VI/II** input signal level that represents the **VI/II Torque Reference Setpoint #1 (%)**: **F201**,
- **Torque Reference Setpoint #2 (%)** (**F206**),
- the **VI/II** input signal level that represents **Torque Reference Setpoint #2 (%)**: **F203**.

Once set, as the **VI/II** input changes, the output frequency or the output torque of the drive will vary in accordance with the above settings.

This parameter sets the **VI/II** input level that represents **VI/II Speed Reference Setpoint #1** (torque or frequency). This value is entered as 0 – 100% of the **VI/II** input signal range.

The input signal may be trimmed using **F470** (Bias) and **F471** (Gain).

The default value for this parameter (**F201**) is 20%. The **II** input is commonly used for the 4 – 20 mA current loop signal where 4 mA equals 20% of a 20 mA signal. If the **VI** input is used (0 – 10 VDC input), parameter **F201** may be changed to 0.0% (of the input signal).

Frequency Settings

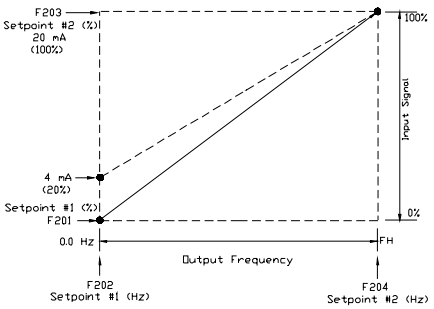

Torque Settings

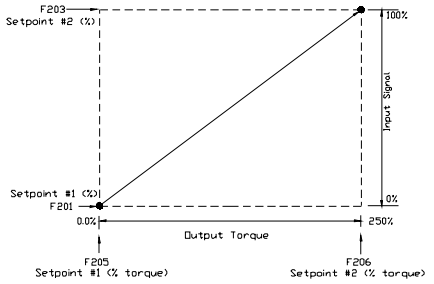

VI/II Speed Reference Setpoint #1 (frequency)

Program ⇒ Frequency Setting Parameters ⇒ Speed Reference Setpoints ⇒ **VI/II**

Direct Access Number — F202

Parameter Type — **Numerical**

Factory Default — **0.0**

Changeable During Run — **Yes**

Minimum — 0.0

Maximum — **Max. Freq.** (**F011**)

Units — Hz

This parameter is used to set the gain and bias of the **VI/II** input terminals when either terminal is used as the control input while operating in the **Speed Control** mode.

See **F201** for further information on this setting.

This parameter sets **VI/II Speed Reference Setpoint #1 (frequency)** and is the frequency that is associated with the setting of **F201**.

VI/II Speed Reference Setpoint #2 (%)

Program ⇒ Frequency Setting Parameters ⇒ Speed Reference Setpoints ⇒ **VI/II**

This parameter is used to set the gain and bias of the **VI/II** input terminals when either terminal is used as the control input while operating in the **Speed Control** or the **Torque Control** mode.

See **F201** for further information on this setting.

This parameter sets the **VI/II** input level that represents **Reference Setpoint #2** (torque or frequency). This value is entered as 0 – 100% of the **VI/II** input signal range.

Direct Access Number — F203

Parameter Type — **Numerical**

Factory Default — **100.0**

Changeable During Run — **Yes**

Minimum — 0.0

Maximum — 100.0

Units — %

VI/II Speed Reference Setpoint #2 (frequency)

Program ⇒ Frequency Setting Parameters ⇒ Speed Reference Setpoints ⇒ **VI/II**

This parameter is used to set the gain and bias of the **VI/II** input terminals when either terminal is used as the control input while operating in the **Speed Control** mode.

See **F201** for further information on this setting.

This parameter sets **VI/II Speed Reference Setpoint #2 (frequency)** and is the frequency that is associated with the setting of **F203**.

Direct Access Number — F204

Parameter Type — **Numerical**

Factory Default — **80.0**

Changeable During Run — **Yes**

Minimum — 0.0

Maximum — **Max. Freq.** (**F011**)

Units — Hz

VI/II Torque Reference Setpoint #1 (%)

Program ⇒ Torque Setting Parameters ⇒ Setpoints ⇒ **VI/II**

This parameter is used to set the gain and bias of the **VI/II** input terminals when either terminal is used as the control input while operating in the **Torque Control** mode.

This is accomplished by establishing an associated **V/f** output pattern for a given **VI/II** input level and motor load.

See **F201** for further information on this setting.

This parameter sets **Torque Reference Setpoint #1 (%)** and is the output torque value that is associated with the setting of **F201**. This value is entered as 0 to 250% of the rated torque.

Direct Access Number — F205

Parameter Type — **Numerical**

Factory Default — **0.0**

Changeable During Run — **Yes**

Minimum — 0.0

Maximum — 250.0

Units — %

VI/II Torque Reference Setpoint #2 (%)

Program ⇒ Torque Setting Parameters ⇒ Setpoints ⇒ **VI/II**

This parameter is used to set the gain and bias of the **VI/II** input terminals when either terminal is used as the control input while operating in the **Torque Control** mode.

This is accomplished by establishing an associated **V/f** output pattern for a given **VI/II** input level and motor load.

See **F201** for further information on this setting.

This parameter sets **Torque Reference Setpoint #2 (%)** and is the output torque value that is associated with the setting of **F203**. This value is entered as 0 to 250% of the rated torque.

Direct Access Number — F206

Parameter Type — **Numerical**

Factory Default — **100.0**

Changeable During Run — **Yes**

Minimum — 0.0

Maximum — 250.0

Units — %

Frequency Mode #2

Program ⇒ Fundamental Parameters ⇒ **Standard Mode Selection**

This parameter selects the source of the frequency command signal to be used as **Frequency Mode #2** in the event that **Frequency Mode #1** is disabled or if **Frequency Mode #2** is set up as the primary control parameter. See **F004** and **F200** for additional information on this setting.

Settings:

Use VI/II
Use RR
Use RX
Use Option Card RX2
Use LED Keypad Option
Use Binary/BCD Input
Use Common Serial (TTL)
Use RS232/RS485
Use Communication Card
Use Motorized Pot. Simulation
Use Pulse Input Option

Direct Access Number — F207

Parameter Type — **Selection List**

Factory Default — **VI/II**

Changeable During Run — **Yes**

Mode #1/#2 Switching Frequency

Program ⇒ Fundamental Parameters ⇒ Standard Mode Selection ⇒ **Mode #1/#2 Switching Frequency**

This parameter sets the threshold frequency that will be used in **F200** to determine if **Frequency Source #1** or **#2** will control the output of the ASD.

See **F200** for additional information on this setting.

Direct Access Number — F208

Parameter Type — **Numerical**

Factory Default — **1.0**

Changeable During Run — **Yes**

Minimum — 0.1

Maximum — **Max. Freq.** (**F011**)

Units — Hz

Analog Input Filter

Program ⇒ Frequency Setting Parameters ⇒ **Analog Filter**

Analog filtering is applied after the analog reference signal is converted to a digital signal. The type of filtering used is **Rolling Average** over time.

Settings:

None
Small
Medium
Large

The analog input signal is sampled and converted to a digital signal. With no filtering applied, the digital value from the conversion is scaled for use by the microprocessor of the ASD.

If the filtering selection is **Small**, the ASD averages the last 5 sampled (digital) values. The rolling average is updated (every 4 µS) and scaled for use by the microprocessor.

If the filtering selection is **Medium**, the ASD averages the last 20 sampled (digital) values. The rolling average is updated (every 4 µS) and scaled for use by the microprocessor.

If the filtering selection is **Large**, the ASD averages the last 50 sampled (digital) values. The rolling average is updated (every 4 µS) and scaled for use by the microprocessor.

False responses to electrical noise are eliminated with no loss in bandwidth because the value used by the drive is the average value of several samples.

Direct Access Number — F209

Parameter Type — **Selection List**

Factory Default — **None**

Changeable During Run — **Yes**

RR Speed Reference Setpoint #1 (%)

Program ⇒ Frequency Setting Parameters ⇒ Speed Reference Setpoints ⇒ **RR**

Direct Access Number — F210

Parameter Type — **Numerical**

Factory Default — **0.0**

Changeable During Run — **Yes**

Minimum — 0.0

Maximum — 100.0

Units — %

This parameter is used to set the gain and bias of the **RR** input terminal when this terminal is used as the control input while operating in the **Speed Control** or the **Torque Control** mode.

Perform the following setup to allow the system to receive control input at the **RR** terminal:

- Program ⇒ Fundamental Parameters ⇒ Standard Mode Selection ⇒ Command Mode ⇒ **Use Control Terminal Strip**.
- Program ⇒ Fundamental Parameters ⇒ Standard Mode Selection ⇒ Frequency Mode #1 ⇒ **Use RR**.
- Provide a **Run** command (**F** or **R**).

Gain and Bias Settings

When operating in the **Speed Control** mode, the settings that determine the gain and bias of the **RR** terminal are:

- **RR Speed Reference Setpoint #1 (frequency)** (**F211**),
- the **RR** input signal level that represents **RR Speed Reference Setpoint #1 (frequency)**: **F210**,
- **RR Speed Reference Setpoint #2 (frequency)** (**F213**), and
- the **RR** input signal level that represents **RR Speed Reference Setpoint #2 (frequency)**: **F212**.

When operating in the **Torque Control** mode, the settings that determine the gain and bias of the **RR** terminal are:

- **Torque Reference Setpoint #1 (%)** (**F214**),
- the **RR** input signal level that represents the **RR Torque Reference Setpoint #1 (%)**: **F210**,
- **Torque Reference Setpoint #2 (%)** (**F215**), and
- the **RR** input signal level that represents the **RR Torque Reference Setpoint #2 (%)**: **F212**.

Once set, as the **RR** input voltage changes, the output frequency or the output torque of the drive will vary in accordance with the above settings.

This parameter sets the **RR** input level that represents **RR Speed Reference Setpoint #1** (torque or frequency). This value is entered as 0 – 100% of the 0 – 10 VDC **RR** input signal range.

The input signal may be trimmed using **F472** (Bias) and **F473** (Gain).

Frequency Settings

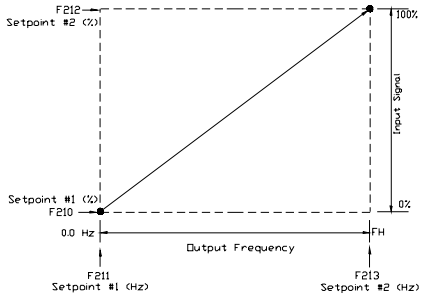

Torque Settings

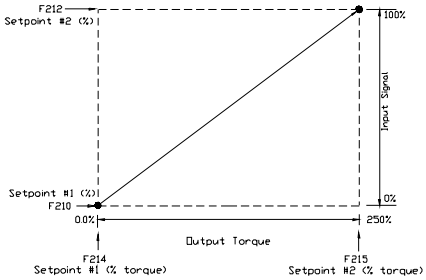

RR Speed Reference Setpoint #1 (frequency)

Program ⇒ Frequency Setting Parameters ⇒ Speed Reference Setpoints ⇒ **RR**

Direct Access Number — F211

Parameter Type — **Numerical**

Factory Default — **0.0**

Changeable During Run — **Yes**

Minimum — 0.0

Maximum — 100.0

Units — Hz

This parameter is used to set the gain and bias of the **RR** input terminal when this terminal is used as the control input while operating in the **Speed Control** mode.

See **F210** for further information on this setting.

This parameter sets the **RR Speed Reference Setpoint #1 (frequency)** and is the frequency that is associated with the setting of **F210**.

RR Speed Reference Setpoint #2 (%)

Program ⇒ Frequency Setting Parameters ⇒ Speed Reference Setpoints ⇒ **RR**

This parameter is used to set the gain and bias of the **RR** input terminal when this terminal is used as the control input while operating in the **Speed Control** or the **Torque Control** mode.

See **F210** for further information on this setting.

This parameter sets the **RR** input level that represents **RR Reference Setpoint #2 (frequency)** (torque or frequency). This value is entered as 0 – 100% of the 0 – 10 VDC **RR** input signal range.

Direct Access Number — F212

Parameter Type — **Numerical**

Factory Default — **100.0**

Changeable During Run — **Yes**

Minimum — 0.0

Maximum — 100.0

Units — %

RR Speed Reference Setpoint #2 (frequency)

Program ⇒ Frequency Setting Parameters ⇒ Speed Reference Setpoints ⇒ **RR**

This parameter is used to set the gain and bias of the **RR** input terminal when this terminal is used as the control input while operating in the **Speed Control** mode.

See **F210** for further information on this setting.

This parameter sets **RR Speed Reference Setpoint #2 (frequency)** and is the frequency that is associated with the setting of **F212**.

Direct Access Number — F213

Parameter Type — **Numerical**

Factory Default — **80.0**

Changeable During Run — **Yes**

Minimum — 0.0

Maximum — 100.0

Units — Hz

RR Torque Reference Setpoint #1 (%)

Program ⇒ Torque Setting Parameters ⇒ Setpoints ⇒ **RR**

This parameter is used to set the gain and bias of the **RR** input terminal when this terminal is used as the control input while operating in the **Torque Control** mode.

This is accomplished by establishing an associated **V/f** output pattern for a given **RR** input level and motor load.

See **F210** for further information on this setting.

This parameter sets **RR Torque Reference Setpoint #1** and is the output torque value that is associated with setting of **F210**. This value is entered as 0 – 250% of the rated torque.

Direct Access Number — F214

Parameter Type — **Numerical**

Factory Default — **0.0**

Changeable During Run — **Yes**

Minimum — 0.0

Maximum — 250.0

Units — %

RR Torque Reference Setpoint #2 (%)

Program ⇒ Torque Setting Parameters ⇒ Setpoints ⇒ **RR**

This parameter is used to set the gain and bias of the **RR** input terminal when this terminal is used as the control input while operating in the **Torque Control** mode.

This is accomplished by establishing an associated **V/f** output pattern for a given **RR** input level and motor load.

See **F210** for further information on this setting.

This parameter sets **RR Torque Reference Setpoint #2** and is the output torque value that is associated with setting of **F212**. This value is entered as 0 – 250% of the rated torque.

Direct Access Number — F215

Parameter Type — **Numerical**

Factory Default — **100.0**

Changeable During Run — **Yes**

Minimum — 0.0

Maximum — 250.0

Units — %

RX Speed Reference Setpoint #1 (%)

Program ⇒ Frequency Setting Parameters ⇒ Speed Reference Setpoints ⇒ **RX**

Direct Access Number — F216

Parameter Type — **Numerical**

Factory Default — **0.0**

Changeable During Run — **Yes**

Minimum — -100.0

Maximum — 100.0

Units — %

This parameter is used to set the direction, gain, and bias of the **RX** input terminal when this terminal is used as the control input while operating in the **Speed Control** or the **Torque Control** mode.

Perform the following setup to allow the system to receive control input at the **RX** input terminal:

- Program ⇒ Fundamental Parameters ⇒ Standard Mode Selection ⇒ Command Mode ⇒ **Use Control Terminal Strip**.
- Program ⇒ Fundamental Parameters ⇒ Standard Mode Selection ⇒ Frequency Mode #1⇒ **Use RX**.
- Provide a **Run** command (**F** or **R**).

Gain and Bias Settings

When operating in the **Speed Control** mode, the settings that determine the direction, gain, and bias of the **RX** terminal are:

- **RX Speed Reference Setpoint #1 (frequency)** (**F217**),
- the **RX** input signal level that represents **RX Speed Reference Setpoint #1 (frequency)**: **F216**,
- **RX Speed Reference Setpoint #2 (frequency)** (**F219**), and
- the **RX** input signal level that represents **RX Speed Reference Setpoint #2 (frequency)**: **F218**.

Frequency Settings

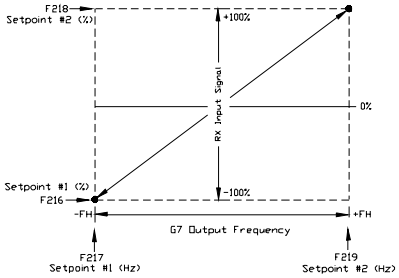

When operating in the **Torque Control** mode, the settings that determine the direction, gain, and bias of the **RX** terminal are:

- **RX Torque Reference Setpoint #1 (%)** (**F220**),
- the **RX** input signal level that represents the **RX Torque Reference Setpoint #1 (%)**: **F216**,
- **RX Torque Reference Setpoint #2 (%)** (**F221**), and
- the **RX** input signal level that represents the **RX Torque Reference Setpoint #2 (%)**: **F218**.

Torque Settings

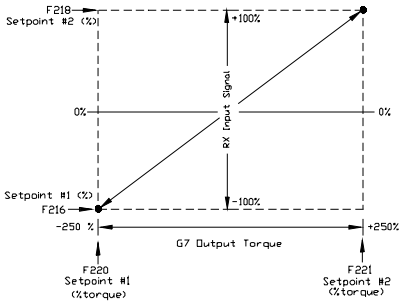

Once set, as the **RX** input voltage changes, the directional information, the output frequency, or the output torque of the drive will vary in accordance with the above settings.

This parameter sets the **RX** input level that represents **RX Reference Setpoint #1** (direction/torque/frequency). This value is entered as -100 to +100% of the -10 to +10 VDC **RX** input signal range.

The input signal may be trimmed using **F474** (Bias) and **F475** (Gain).

RX Speed Reference Setpoint #1 (frequency)

Program ⇒ Frequency Setting Parameters ⇒ Speed Reference Setpoints ⇒ **RX**

Direct Access Number — F217

Parameter Type — **Numerical**

Factory Default — **0.0**

Changeable During Run — **Yes**

Minimum — -80.0

Maximum — +80.0

Units — Hz

This parameter is used to set the direction, gain, and bias of the **RX** input terminal when this terminal is used as the control input while operating in the **Speed Control** mode.

See **F216** for further information on this setting.

This parameter sets **RX Speed Reference Setpoint #1 (frequency)** and is the frequency that is associated with the setting of **F216**.

RX Speed Reference Setpoint #2 (%)

Program ⇒ Frequency Setting Parameters ⇒ Speed Reference Setpoints ⇒ **RX**

This parameter is used to set the direction, gain, and bias of the **RX** input terminal when this terminal is used as the control input while operating in the **Speed Control** or the **Torque Control** mode.

See **F216** for further information on this setting.

This parameter sets the **RX** input level that represents **RX Reference Setpoint #2 (frequency)** (direction/torque/frequency). The range of values for this parameter is -100 to +100% of the -10 to +10 VDC **RX** input signal range.

Direct Access Number — F218

Parameter Type — **Numerical**

Factory Default — +**100.0**

Changeable During Run — **Yes**

Minimum — -100.0

Maximum — +100.0

Units — %

RX Speed Reference Setpoint #2 (frequency)

Program ⇒ Frequency Setting Parameters ⇒ Speed Reference Setpoints ⇒ **RX**

This parameter is used to set the direction, gain, and bias of the **RX** input terminal when this terminal is used as the control input while operating in the **Speed Control** mode.

See **F216** for further information on this setting.

This parameter sets **RX Speed Reference Setpoint #2 (frequency)** and is the frequency that is associated with the setting of **F218**.

Direct Access Number — F219

Parameter Type — **Numerical**

Factory Default — +**80.0**

Changeable During Run — **Yes**

Minimum — -80.0

Maximum — +80.0

Units — Hz

RX Torque Reference Setpoint #1 (%)

Program ⇒ Torque Setting Parameters ⇒ Setpoints ⇒ **RX**

This parameter is used to set the direction, gain, and bias of the **RX** input terminal when this terminal is used as the control input while operating in the **Torque Control** mode.

This is accomplished by establishing an associated **V/f** output pattern for a given **RX** input level and motor load.

See **F216** for further information on this setting.

This parameter sets **RX Torque Reference Setpoint #1 (%)** and is the output torque value that is associated with setting of **F216**. This value is entered as -250 to +250% of the rated torque.

Direct Access Number — F220

Parameter Type — **Numerical**

Factory Default — **0.0**

Changeable During Run — **Yes**

Minimum — -250.0

Maximum — +250.0

Units — %

RX Torque Reference Setpoint #2 (%)

Program ⇒ Torque Setting Parameters ⇒ Setpoints ⇒ **RX**

This parameter is used to set the direction, gain, and bias of the **RX** input terminal when this terminal is used as the control input while operating in the **Torque Control** mode.

This is accomplished by establishing an associated **V/f** output pattern for a given **RX** input level and motor load.

See **F220** for further information on this setting.

This parameter sets **RX Torque Reference Setpoint #2 (%)** and is the output torque value that is associated with setting of **F218**. This value is entered as -250 to +250% of the rated torque.

Direct Access Number — F221

Parameter Type — **Numerical**

Factory Default — +**100.0**

Changeable During Run — **Yes**

Minimum — -250.0

Maximum — +250.0

Units — %

RX2 Speed Reference Setpoint #1 (%)

Program ⇒ Frequency Setting Parameters ⇒ Speed Reference Setpoints ⇒ **RX2**

Direct Access Number — F222

Parameter Type — **Numerical**

Factory Default — **0.0**

Changeable During Run — **Yes**

Minimum — -100.0

Maximum — 100.0

Units — %

This parameter is used to set the direction, gain, and bias of the **RX2** input terminal when this terminal is used as the control input while operating in the **Speed Control** or the **Torque Control** mode.

Note: *The **RX2** input terminal may be used with the **ASD-Multicom** option board only.*

Perform the following setup to allow the system to receive control input at the **RX2** input terminal:

- Program ⇒ Fundamental Parameters ⇒ Standard Mode Selection ⇒ Command Mode ⇒ **Use Control Terminal Strip**.
- Program ⇒ Fundamental Parameters ⇒ Standard Mode Selection ⇒ Frequency Mode #1⇒ **Use Option Card RX2**.
- Provide a **Run** command (**F** or **R**).

Gain and Bias Settings

When operating in the **Speed Control** mode, the settings that determine the direction, gain, and bias of the **RX2** terminal are:

- **RX2 Speed Reference Setpoint #1 (frequency)** (**F223**),
- the **RX2** input signal level that represents **RX2 Speed Reference Setpoint #1 (frequency)**: **F222**,
- **RX2 Speed Reference Setpoint #2 (frequency)** (**F225**), and
- the **RX2** input signal level that represents **RX2 Speed Reference Setpoint #2 (frequency)**: **F224**.

When operating in the **Torque Control** mode, the settings that determine the direction, gain, and bias of the **RX2** terminal are:

- **RX2 Torque Reference Setpoint #1 (%)** (**F226**),
- the **RX2** input signal level that represents the **RX2 Torque Reference Setpoint #1 (%)**: **F222**,
- **RX2 Torque Reference Setpoint #2 (%)** (**F227**), and
- the **RX2** input signal level that represents the **RX2 Torque Reference Setpoint #2 (%)**: **F224**.

Once set, as the **RX2** input voltage changes, the directional information, the output frequency, or the output torque of the drive will vary in accordance with the above settings.

This parameter sets the **RX2** input level that represents **RX2 Reference Setpoint #1 (frequency)** (direction/torque/frequency). This value is entered as -100 to +100% of the -10 to +10 VDC **RX2** input signal range.

The input signal may be trimmed using **F476** (Bias) and **F477** (Gain).

Frequency Settings

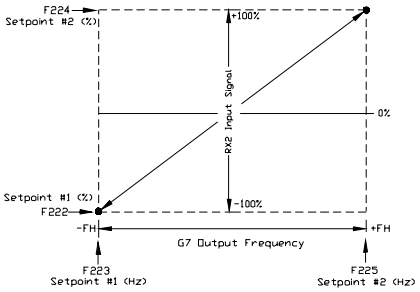

Torque Settings

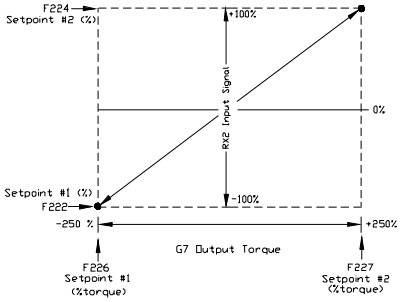

RX2 Speed Reference Setpoint #1 (frequency)

Program ⇒ Frequency Setting Parameters ⇒ Speed Reference Setpoints ⇒ **RX2**

Direct Access Number — F223

Parameter Type — **Numerical**

Factory Default — **0.0**

Changeable During Run — **Yes**

Minimum — -80.0

Maximum — +80.0

Units — Hz

This parameter is used to set the direction, gain, and bias of the **RX2** input terminal when this terminal is used as the control input while operating in the **Speed Control** mode.

See **F222** for further information on this setting.

This parameter sets **RX2 Speed Reference Setpoint #1 (frequency)** and is the frequency that is associated with the setting of **F222**.

RX2 Speed Reference Setpoint #2 (%)

Program ⇒ Frequency Setting Parameters ⇒ Speed Reference Setpoints ⇒ **RX2**

This parameter is used to set the direction, gain, and bias of the **RX2** input terminal when this terminal is used as the control input while operating in the **Speed Control** or the **Torque Control** mode.

See **F222** for further information on this setting.

This parameter sets the **RX2** input level that represents **RX2 Reference Setpoint #2 (frequency)** (direction/torque/frequency). This value is entered as -100 to +100% of the -10 to +10 VDC **RX2** input signal range.

Direct Access Number — F224

Parameter Type — **Numerical**

Factory Default — +**100.0**

Changeable During Run — **Yes**

Minimum — -100.0

Maximum — +100.0

Units — %

RX2 Speed Reference Setpoint #2 (frequency)

Program ⇒ Frequency Setting Parameters ⇒ Speed Reference Setpoints ⇒ **RX2**

This parameter is used to set the direction, gain, and bias of the **RX2** input terminal when this terminal is used as the control input while operating in the **Speed Control** mode.

See **F222** for further information on this setting.

This parameter sets **RX2 Speed Reference Setpoint #2 (frequency)** and is the frequency that is associated with the setting of **F224**.

Direct Access Number — F225

Parameter Type — **Numerical**

Factory Default — +**80.0**

Changeable During Run — **Yes**

Minimum — -80.0

Maximum — +80.0

Units — Hz

RX2 Torque Reference Setpoint #1 (%)

Program ⇒ Torque Setting Parameters ⇒ Setpoints ⇒ **RX2**

This parameter is used to set the direction, gain, and bias of the **RX2** input terminal when this terminal is used as the control input while operating in the **Torque Control** mode.

This is accomplished by establishing an associated **V/f** output pattern for a given **RX2** input level and motor load.

See **F222** for further information on this setting.

This parameter sets **RX2 Torque Reference Setpoint #1 (%)** and is the output torque value that is associated with the setting of **F222**. This value is entered as -250 to +250% of the rated torque.

Direct Access Number — F226

Parameter Type — **Numerical**

Factory Default — **0.0**

Changeable During Run — **Yes**

Minimum — -250.0

Maximum — +250.0

Units — %

RX2 Torque Reference Setpoint #2 (%)

Program ⇒ Torque Setting Parameters ⇒ Setpoints ⇒ **RX2**

This parameter is used to set the direction, gain, and bias of the **RX2** input terminal when this terminal is used as the control input while operating in the **Torque Control** mode.

This is accomplished by establishing an associated **V/f** output pattern for a given **RX2** input level and motor load.

See **F222** for further information on this setting.

This parameter sets **RX2 Torque Reference Setpoint #2 (%)** and is the output torque value that is associated with the setting of **F224**. This value is entered as -250 to +250% of the rated torque.

Direct Access Number — F227

Parameter Type — **Numerical**

Factory Default — +**100.0**

Changeable During Run — **Yes**

Minimum — -250.0

Maximum — +250.0

Units — %

BIN Speed Reference Setpoint #1 (%)

Program ⇒ Frequency Setting Parameters ⇒ Speed Reference Setpoints ⇒ **BIN**

This parameter is used to set the direction, gain, and bias of the **BIN** binary input terminals when these terminals are used as the control input while operating in the **Speed Control** or the **Torque Control** mode.

Perform the following setup to allow the system to receive a binary control input:

- Program ⇒ Fundamental Parameters ⇒ Standard Mode Selection ⇒ Command Mode ⇒ **Use Control Terminal Strip**.
- Program ⇒ Fundamental Parameters ⇒ Standard Mode Selection ⇒ Frequency Mode #1⇒ **Use Binary/BCD Input**.
- Program ⇒ Terminal Selection Parameters ⇒ **Input Terminals**; select and set the desired discrete input terminals to **Binary Bit**(s) **0 – 7** (or 0 – MSB). The binary terminal input word will control the direction, speed, or torque of the motor.
- Provide a **Run** command (**F** or **R**).

Direction/Gain/Bias Setting

When operating in the **Speed Control** mode, the settings that determine the direction, gain, and bias of the **BIN** binary input terminals are:

- **BIN Speed Reference Setpoint #1 (frequency)** (**F229**),
- the binary input value (% of 255_D) that represents the **BIN Speed Reference Setpoint #1 (frequency)**: **F228**,
- **BIN Speed Reference Setpoint #2 (frequency)** (**F231**), and
- the binary input value (% of 255_D) that represents the **BIN Speed Reference Setpoint #2 (frequency)**: **F230**.

Note: *255_D is the decimal equivalent of the 8-bit BIN word with all input terminals set to one (255 decimal = 11111111 binary).*

When operating in the **Torque Control** mode, the settings that determine the direction, gain, and bias of the **BIN** binary input terminals are:

- **BIN Torque Reference Setpoint #1 (%)** (**F232**),
- the binary input value (% of 255_D) that represents the **BIN Torque Reference Setpoint #1**: **F228**,
- **BIN Torque Reference Setpoint #2 (%)** (**F233**), and
- the binary input value (% of 255_D) that represents the **BIN Torque Reference Setpoint #2**: **F230**.

Once set, as the **BIN** input word changes, the directional information, the output frequency, or the output torque of the drive will vary in accordance with the above settings.

This parameter sets **BIN Reference Setpoint #1** (direction/torque/frequency) and is entered as 0 to 100% of the **BIN** binary input word 11111111 (255_D).

Direct Access Number — F228

Parameter Type — **Numerical**

Factory Default — **0.0**

Changeable During Run — **Yes**

Minimum — 0.0

Maximum — 100.0

Units — %

Frequency Settings

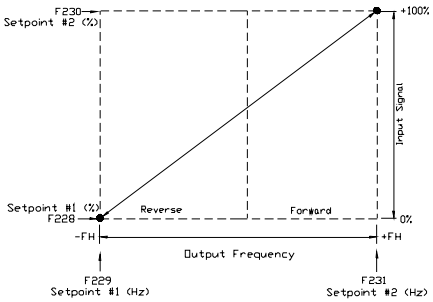

Torque Settings

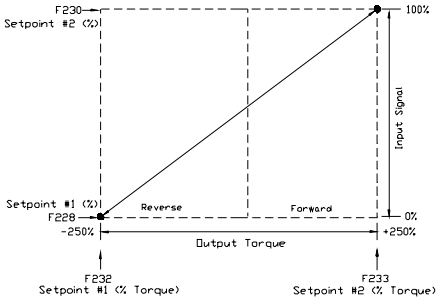

BIN Speed Reference Setpoint #1 (frequency)

Program ⇒ Frequency Setting Parameters ⇒ Speed Reference Setpoints ⇒ **BIN**

This parameter is used to set the direction, gain, and bias of the **BIN** binary input terminals when these terminals are used as the control input while operating in the **Speed Control** mode.

See **F228** for further information on this setting.

This parameter sets **BIN Speed Reference Setpoint #1 (frequency)** and is the frequency that is associated with the setting of **F228**.

Direct Access Number — F229

Parameter Type — **Numerical**

Factory Default — **0.0**

Changeable During Run — **Yes**

Minimum — -80.0

Maximum — +80.0

Units — Hz

BIN Speed Reference Setpoint #2 (%)

Program ⇒ Frequency Setting Parameters ⇒ Speed Reference Setpoints ⇒ **BIN**

This parameter is used to set the direction, gain, and bias of the **BIN** binary input terminals when these terminals are used as the control input while operating in the **Speed Control** or the **Torque Control** mode.

See **F228** for further information on this setting.

This parameter sets **BIN Reference Setpoint #2** (direction/torque/frequency) and is entered as 0 to 100% of the **BIN** binary input word 11111111 (255_D).

Direct Access Number — F230

Parameter Type — **Numerical**

Factory Default — **100.0**

Changeable During Run — **Yes**

Minimum — 0.0

Maximum — 100.0

Units — %

BIN Speed Reference Setpoint #2 (frequency)

Program ⇒ Frequency Setting Parameters ⇒ Speed Reference Setpoints ⇒ **BIN**

This parameter is used to set the direction, gain, and bias of the **BIN** binary input terminals when these terminals are used as the control input while operating in the **Speed Control** mode.

See **F228** for further information on this setting.

This parameter sets **BIN Speed Reference Setpoint #2 (frequency)** and is the frequency that is associated with the setting of **F230**.

Direct Access Number — F231

Parameter Type — **Numerical**

Factory Default — +**80.0**

Changeable During Run — **Yes**

Minimum — -80.0

Maximum — +80.0

Units — Hz

BIN Torque Reference Setpoint #1 (%)

Program ⇒ Torque Setting Parameters ⇒ Setpoints ⇒ **BIN**

This parameter is used to set the direction, gain, and bias of the **BIN** binary input terminals when these terminals are used as the control input while operating in the **Torque Control** mode.

This is accomplished by establishing an associated **V/f** output pattern for a given **BIN** binary input and motor load.

See **F228** for further information on this setting.

This parameter sets **BIN Torque Reference Setpoint #1 (%)** and is entered as -250 to +250% of the rated torque.

Direct Access Number — F232

Parameter Type — **Numerical**

Factory Default — **0.0**

Changeable During Run — **Yes**

Minimum — -250.0

Maximum — +250.0

Units — %

BIN Torque Reference Setpoint #2 (%)

Program ⇒ Torque Setting Parameters ⇒ Setpoints ⇒ **BIN**

Direct Access Number — F233

Parameter Type — **Numerical**

Factory Default — +**100.0**

Changeable During Run — **Yes**

Minimum — -250.0

Maximum — +250.0

Units — %

This parameter is used to set the direction, gain, and bias of the **BIN** binary input terminals when these terminals are used as the control input while operating in the **Torque Control** mode.

This is accomplished by establishing an associated **V/f** output pattern for a given **BIN** binary input and motor load.

See **F232** for further information on this setting.

This parameter sets **BIN Torque Reference Setpoint #2 (%)** and is entered as -250 to +250% of the rated torque.

PG Speed Reference Setpoint #1 (%)

Program ⇒ Frequency Setting Parameters ⇒ Speed Reference Setpoints ⇒ **PG**

Direct Access Number — F234

Parameter Type — **Numerical**

Factory Default — **0.0**

Changeable During Run — **Yes**

Minimum — -100.0

Maximum — +100.0

Units — %

Frequency Settings

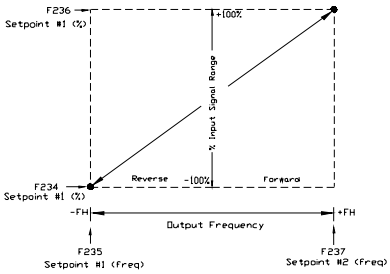

This parameter is used to set the direction, gain, and bias of the **PG** input terminal when it is used as the **Speed/Direction** control input. The **PG** input signal is a pulse count originating from a shaft-mounted **Encoder**.

Note: *The **PG** input terminal may be used with the **ASD-Multicom** option board only.*

Perform the following setup to allow the system to receive a binary control input:

- Program ⇒ Fundamental Parameters ⇒ Standard Mode Selection ⇒ Command Mode ⇒ (any setting).
- Program ⇒ Fundamental Parameters ⇒ Standard Mode Selection ⇒ Frequency Mode #1⇒ **Use Pulse Input Option**.
- Provide a **Run** command (**F** or **R**).

The settings that determine the direction, gain, and bias of the **PG** input are:

- **PG Speed Reference Setpoint #1 (frequency)** (**F235**),
- the **PG** input pulse count that represents **PG Speed Reference Setpoint #1 (frequency)**: **F234**,
- **PG Speed Reference Setpoint #2 (frequency)** (**F237**), and
- the **PG** input pulse count that represents **PG Speed Reference Setpoint #2 (frequency)**: **F236**.

Once set, as the **PG** input pulse count changes, the directional information or the output frequency of the drive will vary in accordance with the above settings.

This parameter sets the **PG** input pulse count that represents **Reference Setpoint #1 (frequency)** (direction/speed). The range of values for this parameter is -100 to +100% of the **PG** input pulse count range.

Note: *Further application-specific **PG** settings may be performed from the following path: Program ⇒ Feedback Parameters ⇒ **PG Settings**.*

PG Speed Reference Setpoint #1 (frequency)

Program ⇒ Frequency Setting Parameters ⇒ Speed Reference Setpoints ⇒ **PG**

This parameter is used to set the direction, gain, and bias of the **PG** input terminal when it is used as the **Speed/Direction-Control** input.

See **F234** for further information on this setting.

This parameter sets **PG Speed Reference Setpoint #1 (frequency)** and is the frequency that is associated with the setting of **F234**.

Direct Access Number — F235
Parameter Type — **Numerical**
Factory Default — **0.0**
Changeable During Run — **Yes**
Minimum — -80.0
Maximum — +80.0
Units — Hz

PG Speed Reference Setpoint #2 (%)

Program ⇒ Frequency Setting Parameters ⇒ Speed Reference Setpoints ⇒ **PG**

This parameter is used to set the direction, gain, and bias of the **PG** input terminal when it is used as the **Speed/Direction-Control** input.

See **F234** for further information on this setting.

This parameter sets the **PG** input pulse count that represents **Reference Setpoint #1** (direction/speed). The range of values for this parameter is -100 to +100% of the **PG** input pulse count range.

Direct Access Number — F236
Parameter Type — **Numerical**
Factory Default — +**100.0**
Changeable During Run — **Yes**
Minimum — -100.0
Maximum — +100.0
Units — %

PG Speed Reference Setpoint #2 (frequency)

Program ⇒ Frequency Setting Parameters ⇒ Speed Reference Setpoints ⇒ **PG**

This parameter is used to set the direction, gain, and bias of the **PG** input terminal when it is used as the **Speed/Direction-Control** input.

See **F234** for further information on this setting.

This parameter sets **PG Speed Reference Setpoint #2 (frequency)** and is the frequency that is associated with the setting of **F236**.

Direct Access Number — F237
Parameter Type — **Numerical**
Factory Default — +**80.0**
Changeable During Run — **Yes**
Minimum — -80.0
Maximum — +80.0
Units — Hz

Startup Frequency

Program ⇒ Special Control Parameters ⇒ **Frequency Control**

The output of the drive will remain at 0.0 Hz until the programmed speed value exceeds this setting during startup. Once exceeded during startup, the output frequency of the drive will accelerate to the programmed setting.

Output frequencies below the **Startup Frequency** will not be output from the drive during startup. However, once reaching the **Startup Frequency**, speed values below the **Startup Frequency** may be output from the drive.

Direct Access Number — F240
Parameter Type — **Numerical**
Factory Default — **0.10**
Changeable During Run — **Yes**
Minimum — 0.0
Maximum — 10.0
Units — Hz

Run Frequency

Program ⇒ Special Control Parameters ⇒ **Frequency Control**

This parameter establishes a center frequency (**Run Frequency**) of a frequency band.

Parameter **F242** provides a plus-or-minus value for the **Run Frequency;** thus, establishing a frequency band.

During acceleration, the drive will not output a signal to the motor until the lower level of the band is reached.

During deceleration, the drive will continue to output the programmed deceleration output signal to the motor until the lower level of the band is reached; at which time the output will go to 0.0 Hz.

Direct Access Number — F241
Parameter Type — **Numerical**
Factory Default — **0.0**
Changeable During Run — **Yes**
Minimum — 0.0
Maximum — **Max. Freq.** (**F011**)
Units — Hz

Run Frequency Hysteresis

Program ⇒ Special Control Parameters ⇒ **Frequency Control**

This parameter provides a plus-or-minus value for the **Run Frequency** setting (**F241**).

Direct Access Number — F242
Parameter Type — **Numerical**
Factory Default — **0.0**
Changeable During Run — **Yes**
Minimum — 0.0
Maximum — 30.0
Units — Hz

End Frequency

Program ⇒ Special Control Parameters ⇒ **Frequency Control**

This parameter sets the lowest frequency that the drive will recognize during deceleration before the drive goes to 0.0 Hz.

Direct Access Number — F243
Parameter Type — **Numerical**
Factory Default — **0.0**
Changeable During Run — **Yes**
Minimum — 0.0
Maximum — 30.0
Units — Hz

0 Hz Dead Band Signal

Program ⇒ Special Control Parameters ⇒ Special Parameters ⇒ **Dead Band of 0 Hz Frequency**

This parameter sets an output frequency threshold that, until the commanded frequency surpasses this setting, the ASD will output 0 Hz to the motor.

Note: *This setting will override the **Startup Frequency** setting (F240) if this setting has a higher value.*

Direct Access Number — F244
Parameter Type — **Numerical**
Factory Default — **0.0**
Changeable During Run — **Yes**
Minimum — 0.0
Maximum — 5.0
Units — Hz

DC Injection Braking Start Frequency

Program ⇒ Protection Parameters ⇒ **DC Braking**

During deceleration this is the frequency at which **DC Injection** braking will start.

DC Injection Braking

DC Injection Braking is a braking system used with three-phase motors. Unlike conventional brakes, there is no physical contact between the rotating shaft and a stationary brake pad or drum. When braking is required, the drive outputs a DC current that is applied to the windings of the motor to quickly brake the motor. The braking current stops when the time entered in **F252** times out.

The intensity of the DC current used while braking determines how fast the motor will come to a stop and may be set at **F251**. The intensity setting is entered as a percentage of the full load current of the ASD.

DC Injection Braking is also used to preheat the motor or to keep the rotor from spinning freely when the motor is off by providing a pulsating DC current into the motor at the **Carrier Frequency**. This feature may be enabled at **F254**.

Direct Access Number — F250
Parameter Type — **Numerical**
Factory Default — **0.0**
Changeable During Run — **Yes**
Minimum — 0.0
Maximum — 120.0
Units — Hz

DC Injection Braking Current

Program ⇒ Protection Parameters ⇒ **DC Braking**

This parameter sets the percentage of the rated current of the drive that will be used for **DC Injection** braking. A larger load will require a higher setting.

Direct Access Number — F251
Parameter Type — **Numerical**
Factory Default — **50.00**
Changeable During Run — **Yes**
Minimum — 0.00
Maximum — 100.0
Units — %

DC Injection Braking Time

Program ⇒ Protection Parameters ⇒ **DC Braking**

This parameter is used to set the on-time duration of the **DC Injection Braking**.

Direct Access Number — F252

Parameter Type — **Numerical**

Factory Default — **1.00**

Changeable During Run — **Yes**

Minimum — 0.00

Maximum — 10.00

Units — Seconds

Motor Shaft Fixing Control

Program ⇒ Protection Parameters ⇒ **DC Braking**

This parameter determines if **DC Injection** braking is to be used during a change in the direction of the motor.

Settings:

Box checked (Enabled)
Box not checked (Disabled)

Direct Access Number — F253

Parameter Type — **Check Box**

Factory Default — **Disabled**

Changeable During Run — **Yes**

Motor Shaft Stationary Control

Program ⇒ Protection Parameters ⇒ **DC Braking**

This parameter **Enables/Disables** a continuous DC injection at half of the amperage setting of **F251** into a stopped motor. This feature is useful in preheating the motor or to keep the rotor from spinning freely.

Motor Shaft Stationary Control starts after the DC injection brake stops the motor and continues until **ST – CC** is opened, power is turned off, receiving an **Emergency Off** command, or this parameter is changed.

Enabling this feature will also require a non-zero entry at **F250**.

Settings:

Box checked (Enabled)
Box not checked (Disabled)

Direct Access Number — F254

Parameter Type — **Check Box**

Factory Default — **Disabled**

Changeable During Run — **Yes**

0 Hz Command Function

Program ⇒ Special Control Parameters ⇒ Special Parameters ⇒ **Dead Band of 0 Hz Frequency**

This parameter selects the go-to-zero method to be used by the ASD when the ASD is commanded to go to zero Hz.

Settings:

Standard (DC Injection Braking)
0 Hz Command

Direct Access Number — F255

Parameter Type — **Selection List**

Factory Default — **Standard (DC Injection Braking)**

Changeable During Run — **No**

Jog Run Frequency

Program ⇒ Frequency Setting Parameters ⇒ **Jog Settings**

Direct Access Number — F260

Parameter Type — **Numerical**

Factory Default — **0.00**

Changeable During Run — **Yes**

Minimum — 0.00

Maximum — 20.00

Units — Hz

This parameter sets the output frequency of the drive during a **Jog**. **Jogging** is the term used to describe turning the motor on for small increments of time and is used when precise positioning of motor-driven equipment is required.

Enabling the **Jog Window** allows for the **Manual Jog** window to be among the screens accessed during repeated **MON/PRG** entries. This screen must be displayed when **Jogging** using the **EOI**.

The **Jog** function may be initiated from the **EOI** or remotely via the **Control Terminal Strip** or using **Communications** (for further information on using **Communications** for **Jogging**, see the **Communications** manual).

To perform a **Jog**, set this parameter (**F260**) to the desired **Jog** frequency.

Select a **Jog Stop** method (**F261**).

Jog Using the EOI

To initiate a **Jog** from the **EOI** perform the following:

1. Place a check in the **Enable Jog Window** box (Program ⇒ Frequency Setting Parameters ⇒ Jog Settings ⇒ **Enable Jog Window**).

Note: *The **Jog Window** must be displayed on the **EOI** to perform the **Jog** function using the **EOI**.*

2. Press **MON/PRG** to access the **Jog Window**.
3. Using the **Up/Down** arrow keys of the **EOI**, select **Reverse** or **Forward**.
4. Place the system in the **Local** mode (**Local/Remote** LED is on).
5. Press and hold the **Run** key for the desired **Jog** duration.

Jog Using the Control Terminal Strip

To initiate a **Jog** from the **Control Terminal Strip** perform the following:

1. Assign a discrete input terminal to the **Jog** function (see Table 8 on pg. 76).
2. Assign a discrete input terminal to the **F** (**Forward**) function (and **Reverse** if required) (see Table 8 on pg. 76).
3. Provide a **Forward** and/or **Reverse** command from the **Control Terminal Strip**.
4. From the **Jog Window**, use the **Up/Down** arrow keys of the **EOI** to select **Reverse** or **Forward** (Program ⇒ Frequency Setting Parameters ⇒ Jog Settings ⇒ **Enable Jog Window**). Press **MON/PRG** to access the **Jog Window**.
5. Place the system in the **Remote** mode (**Local/Remote** LED is off).
6. Connect the assigned **Jog** terminal (from step 1) to **CC** for the desired **Jog** duration.

Jog Stop Control

Program ⇒ Frequency Setting Parameters ⇒ **Jog Settings**

This parameter sets the stopping method used while operating in the **Jog** mode.

Settings:

Deceleration Stop
Coast Stop
DC Injection Braking Stop

Direct Access Number — F261
Parameter Type — **Selection List**
Factory Default — **Deceleration Stop**
Changeable During Run — **Yes**

Jump Frequency #1

Program ⇒ Special Control Parameters ⇒ **Jump Frequencies**

In conjunction with parameter **F271**, this parameter establishes a user-defined frequency range: the **Jump Frequency** and a plus-or-minus value. During acceleration, the output frequency of the drive will hold at the frequency of the lower level of the **Jump Frequency** range until the programmed acceleration ramp reaches the upper level of the **Jump Frequency** range. Then, the output frequency of the drive will accelerate to the upper level of the **Jump Frequency** range and continue upward as programmed.

During deceleration, the output frequency of the drive will hold at the frequency of the upper level of the **Jump Frequency** range until the programmed deceleration ramp reaches the lower level of the **Jump Frequency** range. Then, the output frequency of the drive will decelerate to the lower level of the **Jump Frequency** range and continue downward as programmed.

Once set up and enabled, it is on in all control modes.

User-selected frequencies may be jumped to avoid the negative effects of mechanical resonance.

Direct Access Number — F270
Parameter Type — **Numerical**
Factory Default — **0.00**
Changeable During Run — **Yes**
Minimum — 0.00
Maximum — Max. Freq. (**F011**)
Units — Hz

Jump Frequency #1 Bandwidth

Program ⇒ Special Control Parameters ⇒ **Jump Frequencies**

This parameter establishes a plus-or-minus value for **Jump Frequency #1** (see **F270**).

Direct Access Number — F271
Parameter Type — **Numerical**
Factory Default — **0.00**
Changeable During Run — **Yes**
Minimum — 0.00
Maximum — 30.00
Units — Hz

Jump Frequency #2

Program ⇒ Special Control Parameters ⇒ **Jump Frequencies**

Same as **Jump Frequency #1** (**F270**) and is used when multiple frequencies are to be jumped (see the plus-or-minus value setting at **F273**). When multiple jump frequencies overlap, the system will recognize the lowest and the highest frequencies as one jump range.

Direct Access Number — F272
Parameter Type — **Numerical**
Factory Default — **0.00**
Changeable During Run — **Yes**
Minimum — 0.00
Maximum — Max. Freq. (**F011**)
Units — Hz

Jump Frequency #2 Bandwidth

Program ⇒ Special Control Parameters ⇒ **Jump Frequencies**

This parameter establishes a plus-or-minus value for **Jump Frequency #2** (**F272**).

Direct Access Number — F273
Parameter Type — **Numerical**
Factory Default — **0.00**
Changeable During Run — **Yes**
Minimum — 0.00
Maximum — 30.0
Units — Hz

Jump Frequency #3

Program ⇒ Special Control Parameters ⇒ **Jump Frequencies**

Same as **Jump Frequency #1** (**F270**) and is used when multiple frequencies are to be jumped (see the plus-or-minus value setting at **F275)**. When multiple jump frequencies overlap, the system will recognize the lowest and the highest frequencies as one jump range.

Direct Access Number — F274
Parameter Type — **Numerical**
Factory Default — **0.00**
Changeable During Run — **Yes**
Minimum — 0.00
Maximum — Max. Freq. (**F011**)
Units — Hz

Jump Frequency #3 Bandwidth

Program ⇒ Special Control Parameters ⇒ **Jump Frequencies**

This parameter establishes a plus-or-minus value for **Jump Frequency #3** (**F274**).

Direct Access Number — F275
Parameter Type — **Numerical**
Factory Default — **0.00**
Changeable During Run — **Yes**
Minimum — 0.00
Maximum — 30.0
Units — Hz

Jump Frequency Processing

Program ⇒ Special Control Parameters ⇒ Jump Frequencies ⇒ **Jump Frequency Processing**

This parameter determines if the output frequency of the ASD or the PID feedback signal will be used as a reference for determining the **Jump Frequency** range.

See **F270** for further information on the **Jump Frequency** settings.

Settings:

Process Amount (use PID feedback)
Output Frequency

Direct Access Number — F276
Parameter Type — **Selection List**
Factory Default — **Process Amount**
Changeable During Run — **Yes**

Preset Speed #8

Program ⇒ Pattern Run Control ⇒ Preset Speeds ⇒ **8**

This parameter assigns an output frequency to binary number 1000 and is identified as **Preset Speed #8**. The binary number is applied to **S1** – **S4** of the **Control Terminal Strip** to output the **Preset Speed** (see **F018** for further information on this parameter).

Direct Access Number — F287
Parameter Type — **Numerical**
Factory Default — **0.00**
Changeable During Run — **Yes**
Minimum — **Lower Limit** (**F013**)
Maximum — **Upper Limit** (**F012**)
Units — Hz

Preset Speed #9

Program ⇒ Pattern Run Control ⇒ Preset Speeds ⇒ **9**

This parameter assigns an output frequency to binary number 1001 and is identified as **Preset Speed #9**. The binary number is applied to **S1** – **S4** of the **Control Terminal Strip** to output the **Preset Speed** (see **F018** for further information on this parameter).

Direct Access Number — F288
Parameter Type — **Numerical**
Factory Default — **0.0**
Changeable During Run — **Yes**
Minimum — **Lower Limit** (**F013**)
Maximum — **Upper Limit** (**F012**)
Units — Hz

Preset Speed #10

Program ⇒ Pattern Run Control ⇒ Preset Speeds ⇒ **10**

This parameter assigns an output frequency to binary number 1010 and is identified as **Preset Speed #10**. The binary number is applied to **S1** – **S4** of the **Control Terminal Strip** to output the **Preset Speed** (see **F018** for further information on this parameter).

Direct Access Number — F289
Parameter Type — **Numerical**
Factory Default — **0.00**
Changeable During Run — **Yes**
Minimum — **Lower Limit** (**F013**)
Maximum — **Upper Limit** (**F012**)
Units — Hz

Preset Speed #11

Program ⇒ Pattern Run Control ⇒ Preset Speeds ⇒ **11**

This parameter assigns an output frequency to binary number 1011 and is identified as **Preset Speed #11**. The binary number is applied to **S1** – **S4** of the **Control Terminal Strip** to output the **Preset Speed** (see **F018** for further information on this parameter).

Direct Access Number — F290
Parameter Type — **Numerical**
Factory Default — **0.00**
Changeable During Run — **Yes**
Minimum — **Lower Limit** (**F013**)
Maximum — **Upper Limit** (**F012**)
Units — Hz

Preset Speed #12

Program ⇒ Pattern Run Control ⇒ Preset Speeds ⇒ **12**

This parameter assigns an output frequency to binary number 1100 and is identified as **Preset Speed #12**. The binary number is applied to **S1** – **S4** of the **Control Terminal Strip** to output the **Preset Speed** (see **F018** for further information on this parameter).

Direct Access Number — F291
Parameter Type — **Numerical**
Factory Default — **0.00**
Changeable During Run — **Yes**
Minimum — **Lower Limit** (**F013**)
Maximum — **Upper Limit** (**F012**)
Units — Hz

Preset Speed #13

Program ⇒ Pattern Run Control ⇒ Preset Speeds ⇒ **13**

This parameter assigns an output frequency to binary number 1101 and is identified as **Preset Speed #13**. The binary number is applied to **S1** – **S4** of the **Control Terminal Strip** to output the **Preset Speed** (see **F018** for further information on this parameter).

Direct Access Number — F292
Parameter Type — **Numerical**
Factory Default — **0.00**
Changeable During Run — **Yes**
Minimum — **Lower Limit** (**F013**)
Maximum — **Upper Limit** (**F012**)
Units — Hz

Preset Speed #14

Program ⇒ Pattern Run Control ⇒ Preset Speeds ⇒ **14**

This parameter assigns an output frequency to binary number 1110 and is identified as **Preset Speed #14**. The binary number is applied to **S1** – **S4** of the **Control Terminal Strip** to output the **Preset Speed** (see **F018** for further information on this parameter).

Direct Access Number — F293
Parameter Type — **Numerical**
Factory Default — **0.00**
Changeable During Run — **Yes**
Minimum — **Lower Limit** (**F013**)
Maximum — **Upper Limit** (**F012**)
Units — Hz

Preset Speed #15

Program ⇒ Pattern Run Control ⇒ Preset Speeds ⇒ **15**

This parameter assigns an output frequency to binary number 1111 and is identified as **Preset Speed #15**. The binary number is applied to **S1** – **S4** of the **Control Terminal Strip** to output the **Preset Speed** (see **F018** for further information on this parameter).

Direct Access Number — F294
Parameter Type — **Numerical**
Factory Default — **0.00**
Changeable During Run — **Yes**
Minimum — **Lower Limit** (**F013**)
Maximum — **Upper Limit** (**F012**)
Units — Hz

PWM Carrier Frequency

Program ⇒ Special Control Parameters ⇒ **Carrier Frequency**

Direct Access Number — F300

Parameter Type — **Numerical**

Factory Default — **2.200**

Changeable During Run — **No**

Minimum — 0.500

Maximum — (ASD-dependent)

Units — kHz

This parameter sets the frequency of the pulse width modulation signal applied to the motor.

Note: *The carrier frequency must be 2.2 kHz or above except when operating in the **Constant Torque**, **Variable Torque**, or the **5-Point Setting** modes.*

Note: *The maximum **Carrier Frequency** setting allowed is 5.0 kHz for the following ASDs:*
230-volt ⇒ 75 HP – 150 HP.
460-volt ⇒ 150 HP – 350 HP.
600-volt ⇒ 150 HP – 300 HP.

*The maximum **Carrier Frequency** setting allowed for all other ASDs is 15 kHz.*

Setting the Carrier Frequency above the Derate Threshold frequency (as listed below) for a given ASD will reduce the capability of the ASD.

Carrier-Frequency Derate Threshold Frequency

Derate Threshold Frequency			
2.2 kHz	**5.0 kHz**	**6.0 kHz**	**8.0 kHz**
V T 1 3 0 G 7 U			
2750B – 215KB	2500B	6160B	2010B – 2600B
2750B – 215KB	2600B	6400B	2400B
415KB – 435KB	4400B	6400B	4015B – 4330B
415KB – 435KB	412KB		4500B – 410KB
615KB – 635KB	410KB		4600B – 4750B
	412KB		6015B – 6120B
	610KB		6220B – 6330B
	610KB		6220B – 6330B
	612KB		6500B – 6750B
			6500B – 6750B

Example

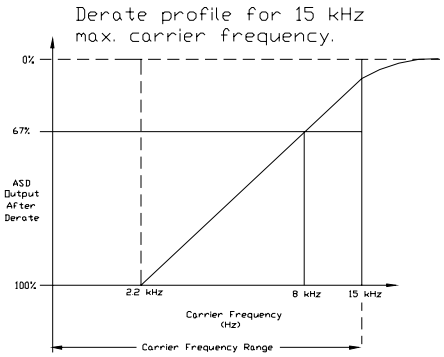

Break/Make ST

Program ⇒ Protection Parameters ⇒ **Retry/Restart**

Direct Access Number — F301

Parameter Type — **Check Box**

Factory Default — **Disabled**

Changeable During Run — **Yes**

This parameter **Enables/Disables** the ability of the drive to start into a spinning motor when the **ST – CC** connection opens momentarily and is then closed (Break/Make ST) or after a power interruption (momentary power failure). This parameter also **Enables/Disables F312** and **F313**.

Settings:

Box checked (Enabled)
Box not checked (Disabled)

Ridethrough Mode

Direct Access Number — F302

Program ⇒ Protection Parameters ⇒ **Undervoltage/Ridethrough**

Parameter Type — **Selection List**

Factory Default — **Off**

Changeable During Run — **Yes**

This parameter determines the motor-control response of the drive in the event of a momentary power outage.

Settings:

Off
Ridethrough
Stop

Number of Retries

Direct Access Number — F303

Program ⇒ Protection Parameters ⇒ **Retry/Restart**

Parameter Type — **Numerical**

Factory Default — **00**

Changeable During Run — **Yes**

Minimum — 00

Maximum — 10

After a trip has occurred, this parameter sets the number of times that an automatic system restart is attempted for a qualified trip.

The trip conditions listed below will not initiate the automatic **Retry/Restart** function:

- OCA1, 2, or 3 (Arm Short Ckt),
- EPH1 (Input Phase Failure),
- EPH0 (Output Phase Failure),
- OCL (Startup Overcurrent),
- EF1 or 2 (Ground Fault),
- EMG (Emergency Off),
- EEP1 (EEPROM Fault),
- Err2 through Err9 (Main RAM/ROM Fault), or
- E-10 (Sink/Source Error),
- 13 (Speed Error), or
- 17 (Key Error).

See the section titled General Safety Information on pg. 1 for further information on this setting.

Dynamic Braking Enable

Direct Access Number — F304

Program ⇒ Protection Parameters ⇒ **Dynamic Braking**

Parameter Type — **Selection List**

Factory Default — **Disabled**

Changeable During Run — **No**

This parameter **Enables/Disables** the **Dynamic Braking** system.

Settings:

Enabled with Overload
Disabled

Dynamic Braking

Dynamic Braking uses the inertial energy of the load to produce a braking force or it may be used to reduce the bus voltage in an attempt to preclude an overvoltage trip during deceleration. The inertial energy of the load drives the rotor and induces a current into the stator of the motor.

The induced stator current (energy) is dissipated through a resistive load. The resistive load is connected across terminals **PA** and **PB** (non-polarized). Using a low-value, high-wattage resistance as a load for the generated current, the resistive load dissipates the induced energy. The dissipated energy is the energy that would otherwise have caused the rotor to continue to rotate.

Dynamic Braking helps to slow the load quickly; it cannot act as a holding brake.

The **Dynamic Braking** function may be setup and enabled by connecting a braking resistor from terminal **PA** to **PB** of the drive and providing the proper information at **F304**, **F308**, and **F309**.

For additional information on selecting the proper resistance value for a given application contact **Toshiba's Marketing Department**.

Overvoltage Stall

Program ⇒ Protection Parameters ⇒ **Stall**

This parameter **Enables/Disables** the **Overvoltage Stall** function. When enabled, this function causes the drive to extend the decel time when the DC bus voltage increases due to transient voltage spikes, regeneration, supply voltage out of specification, etc. in an attempt to reduce the bus voltage.

Settings:

Enabled
Disabled
Enabled (Forced Shorted Deceleration)

Direct Access Number — F305
Parameter Type — **Selection List**
Factory Default — **Enabled**
Changeable During Run — **Yes**

Motor #1 Max Output Voltage

Program ⇒ Motor Parameters ⇒ **Motor Set #1**

This parameter sets the maximum value of the output voltage of the drive. The **Motor #1 Maximum Output Voltage** is the **Motor #1** output voltage at the **Base Frequency** (**F014**). Regardless of the programmed value, the output voltage cannot be higher than the input voltage.

The actual output voltage will be influenced by the input voltage of the ASD and the **Supply Voltage Compensation** setting (**F307**).

Direct Access Number — F306
Parameter Type — **Numerical**
Factory Default — (ASD dependent)
Changeable During Run — **Yes**
Minimum — 0.0
Maximum — 600.0
Units — Volts

Supply Voltage Compensation

Program ⇒ Protection Parameters ⇒ **Base Frequency Voltage**

This parameter **Enables/Disables** the **Voltage Compensation** function. This function provides an output waveform adjustment that compensates for changes in the input voltage.

Settings:

Box checked (Enabled)
Box not checked (Disabled)

Direct Access Number — F307
Parameter Type — **Check Box**
Factory Default — **Enabled**
Changeable During Run — **No**

Dynamic Braking Resistance

Program ⇒ Protection Parameters ⇒ **Dynamic Braking**

This parameter is used to input the resistive value of the **Dynamic Braking Resistor**.

For additional information on selecting the proper resistance value for a given application contact **Toshiba's Marketing Department**.

Note: *Using a resistor value that is too low may result in system damage.*

Direct Access Number — F308
Parameter Type — **Numerical**
Factory Default — **(ASD-dependent)**
Changeable During Run — **No**
Minimum — 1.0
Maximum — 1000.0
Units — Ω

Dynamic Braking Resistance Capacity

Program ⇒ Protection Parameters ⇒ **Dynamic Braking**

This parameter is used to input the wattage of the **Dynamic Braking Resistor**.

For additional information on selecting the proper resistor wattage value for a given application contact **Toshiba's Marketing Department**.

Note: *Using a resistor with a wattage rating that is too low may result in system damage.*

Direct Access Number — F309
Parameter Type — **Numerical**
Factory Default — **(ASD-dependent)**
Changeable During Run — **No**
Minimum — 0.01
Maximum — 600.0
Units — kW

Ridethrough Time

Program ⇒ Protection Parameters ⇒ **Retry/Restart**

In the event of a momentary power outage, this parameter determines the length of the **Ridethrough** time. During a **Ridethrough**, regenerative energy is used to maintain the control circuitry settings; it is not used to drive the motor.

The **Ridethrough** will be maintained for the number of seconds set using this parameter.

Note: *The actual **Ridethrough Time** is load-dependent.*

Direct Access Number — F310

Parameter Type — **Numerical**

Factory Default — **2.00**

Changeable During Run — **Yes**

Minimum — 0.00

Maximum — 320.0

Units — Seconds

Disable Forward Run/Disable Reverse Run

Program ⇒ Frequency Setting Parameters ⇒ **Forward/Reverse Disable**

This parameter **Enables/Disables** the **Forward Run** or **Reverse Run** mode.

If either direction is disabled (box checked), commands received for the disabled direction will not be recognized.

If both directions are disabled (both boxes checked), the received direction command will determine the direction of the motor rotation.

Settings:

Disabled
Enabled

Direct Access Number — F311

Parameter Type — **Check Box**

Factory Default — **Disabled**

Changeable During Run — **No**

Scan Rate

Program ⇒ Protection Parameters ⇒ **Retry/Restart**

In the event of a momentary power outage, the output signal of the drive will cease. Upon restoration of power, the drive will output a low-level signal that will be used to determine the rotation speed of the rotor.

The low-level signal will start scanning the motor at **FH** and decrease until it reaches 0.0 Hz or it matches the signal produced by the turning rotor. Once the rate of rotation is determined, the drive will provide the normal output to engage the motor from its present speed.

This parameter determines the rate at which the scanning signal goes from **FH** to 0.0 Hz. See **F301** for additional information on this parameter.

Direct Access Number — F312

Parameter Type — **Numerical**

Factory Default — **(ASD-dependent)**

Changeable During Run — **No**

Minimum — 0.50

Maximum — 2.50

Lock-on Rate

Program ⇒ Protection Parameters ⇒ **Retry/Restart**

After a momentary power outage, the ASD may have to startup into a spinning motor. The **Lock On Rate** is the difference between the time that the RPM of the motor is determined by the ASD and the time that the ASD outputs a drive signal to the motor.

See **F301** for additional information on this parameter.

Direct Access Number — F313

Parameter Type — **Numerical**

Factory Default — **(ASD-dependent)**

Changeable During Run — **No**

Minimum — 0.50

Maximum — 2.50

Search Method

Program ⇒ Protection Parameters ⇒ **Retry/Restart**

In the event of a momentary power outage, this parameter may be used to set the starting point (frequency) of the scanning signal that is used to determine the rotor speed or this parameter may be used to select the method used to search for the speed of the rotor. See **F301** and **F312** for additional information on this parameter.

Settings:

Normal
Start from 0.0 Hz
Start from Running Frequency
Option Board (ASD-SS)
PG

Direct Access Number — F314

Parameter Type — **Selection List**

Factory Default — **Normal**

Changeable During Run — **No**

Search Inertia

Program ⇒ Protection Parameters ⇒ **Retry/Restart**

After a momentary power loss or the momentary loss of the **ST**-to-**CC** connection, this parameter sets the time for the commanded torque to reach its programmed setting during the automatic restart. This function is in effect so long as the **Retry/Restart** feature is enabled at **F301**.

Settings:

0.5 Sec. (fast)
1.0 Sec. (standard)
1.5 Sec.
2.0 Sec.
2.5 Sec.
3.0 Sec.
3.5 Sec.
4.0 Sec.
4.5 Sec.
5.0 Sec. (slow)

Direct Access Number — F315

Parameter Type — **Selection List**

Factory Default — **1.0**

Changeable During Run — **No**

Units — Seconds

Drooping Gain

Program ⇒ Feedback Parameters ⇒ **Drooping Control**

This parameter sets the effective 100% output torque level while operating in the **Drooping Control** mode. This value is the upper torque limit of the motor being driven by a given ASD while operating in the **Drooping Control** mode.

Direct Access Number — F320

Parameter Type — **Numerical**

Factory Default — **0.00**

Changeable During Run — **Yes**

Minimum — 0.00

Maximum — 100.0

Units — %

Drooping

Drooping Control, also called **Load Share**, is used to share the load among two or more mechanically coupled motors. Unlike **Stall**, which reduces the output frequency in order to limit the load once the load reaches a preset level, **Drooping** can decrease or increase the V/f setting of a motor to maintain a balance between the output torque levels of mechanically coupled motors.

Because of variances in gearboxes, sheaves, belts, motors, and since the speed of the motor is constrained by the mechanical system, one motor may experience more load than its counterpart and may become overloaded. **Drooping Control** allows the overloaded motor to slow down, thus shedding load and encouraging a lightly-loaded motor to pick up the slack. The goal of **Drooping Control** is to have the same torque ratios for mechanically coupled motors.

Speed at Drooping Gain 0%

Program ⇒ Feedback Parameters ⇒ **Drooping Control**

This parameter sets the motor speed when at the 0% output torque gain while operating in the **Drooping Control** mode. This function determines the lowest speed that **Drooping** will be in effect for motors that share the same load.

Direct Access Number — F321
Parameter Type — **Numerical**
Factory Default — **60.00**
Changeable During Run — **Yes**
Minimum — 0.00
Maximum — 320.0
Units — Hz

Speed at Drooping Gain 100%

Program ⇒ Feedback Parameters ⇒ **Drooping Control**

This parameter sets the motor speed when at the 100% output torque gain while operating in the **Drooping Control** mode. This function determines the speed of the individual motors at the 100% **Drooping Gain** setting for motors that share the same load.

Direct Access Number — F322
Parameter Type — **Numerical**
Factory Default — **60.00**
Changeable During Run — **Yes**
Minimum — 0.00
Maximum — 320.0
Units — Hz

Drooping Insensitive Torque Range

Program ⇒ Feedback Parameters ⇒ **Drooping Control**

This parameter defines a torque range in which the **Drooping Control** settings will be ignored and the programmed torque settings will be followed.

Direct Access Number — F323
Parameter Type — **Numerical**
Factory Default — **10.00**
Changeable During Run — **Yes**
Minimum — 0.00
Maximum — 100.0
Units — %

Drooping Output Filter

Program ⇒ Feedback Parameters ⇒ **Drooping Control**

This parameter is used to set the rate of output change allowed when operating in the **Drooping Control** mode.

Jerky operation may be decreased by increasing this setting.

Direct Access Number — F324
Parameter Type — **Numerical**
Factory Default — **100.0**
Changeable During Run — **Yes**
Minimum — 0.1
Maximum — 200.0

Load Inertia (Acc/Dec Torque)

Program ⇒ Feedback Parameters ⇒ Drooping Control ⇒ **Load Inertia**

This parameter is used for calculating accel/decel torque when compensating for load inertia while operating in the **Drooping Control** mode.

Direct Access Number — F325
Parameter Type — **Numerical**
Factory Default — **1.0**
Changeable During Run — **Yes**
Minimum — 0.0
Maximum — 1000.0

Load Torque Filter (Acc/Dec Torque)

Program ⇒ Feedback Parameters ⇒ Drooping Control ⇒ **Load Inertia**

This parameter is used to set the response sensitivity when calculating the accel/decel torque. This setting applies to load inertia compensation while operating in the **Drooping Control** mode.

This parameter should be gradually adjusted to provide smoother **Drooping Control** operation while operating with heavy loads.

Direct Access Number — F326
Parameter Type — **Numerical**
Factory Default — **200.0**
Changeable During Run — **Yes**
Minimum — 0.0
Maximum — 200.0

Drooping Reference

Program ⇒ Feedback Parameters ⇒ Drooping Control ⇒ **Drooping Reference**

This parameter sets the method to be used in determining the output torque while operating in the **Drooping Control** mode.

Settings:

Total Torque Calculated by the Detection Current.
Torque without Acc/Dec Torque Calculated by Detection Current.
Total Torque Calculated by the Command Current.
Torque without Acc/Dec Torque Calculated by the Command Current.

Direct Access Number — F327

Parameter Type — **Selection List**

Factory Default — **Total torque calculated by the detection current**

Changeable During Run — **Yes**

Light-load High-speed Operation Selection

Program ⇒ Special Control Parameters ⇒ Crane/Hoist Settings ⇒ Express Speed Settings ⇒ **Light-Load High-Speed Operation**

This parameter enables the **Light-Load High-Speed** function by selecting an operating mode. The **Light-Load High-Speed** function accelerates the output frequency of the ASD from the programmed speed to the setting established in **F341.**

This parameter may be disabled.

If either of the other selections are made and configured, and after the criteria of **F331** – **F333** are met, the **Light-Load High-Speed** function is enabled and this parameter determines the operating mode of the **Light-Load High-Speed** function.

Settings:

Disabled
Reserved
Automatic Enable - Automatic Speed (**F341**)
Automatic Enable - Preset Speed (Preset ID_{Bin} is OR'ed w/1000_{Bin})
Discrete Enable - Automatic Speed (**F341**) (see item 60 of Table 8 on pg. 76)
Discrete Enable - Preset Speed (Preset ID_{Bin} is OR'ed w/1000_{Bin}) (see item 60 of Table 8 on pg. 76)

Direct Access Number — F330

Parameter Type — **Selection List**

Factory Default — **Disabled**

Changeable During Run — **No**

Minimum — 30.0

Maximum — Upper Limit (**F012**)

Units — Hz

Light-Load High-Speed Operation Switching Lower-Limit Frequency

Program ⇒ Special Control Parameters ⇒ Crane/Hoist Settings ⇒ Express Speed Settings ⇒ **Light-Load High-Speed Operation Switching Lower-Limit Frequency**

This parameter sets an output frequency threshold that, once surpassed, allows the **Light-load High-speed** function to be used.

The **Light-Load High-Speed** function may be used if the frequency threshold (**F331**) and the following conditions are met:

1) **Light-Load High-Speed Operation Enable** is configured at **F330**.

2) The output torque is less than the setting established in **F335** when reaching the frequency setting here.

Direct Access Number — F331

Parameter Type — **Numerical**

Factory Default — **40.00**

Changeable During Run — **Yes**

Minimum — 30.0

Maximum — Upper Limit (**F012**)

Units — Hz

Light-Load High-Speed Operation Load Wait Time

Program ⇒ Special Control Parameters ⇒ Crane/Hoist Settings ⇒ Express Speed Settings ⇒ **Light-Load High-Speed Operation Load Wait-Time**

After the time setting of **F333** times out, this parameter determines the length of time that the **Light-Load High-Speed** criteria must be met until the **Light-Load High-Speed** function engages.

Direct Access Number — F332
Parameter Type — **Numerical**
Factory Default — **1.0**
Changeable During Run — **Yes**
Minimum — 0.0
Maximum — 10.0
Units — Seconds

Light-Load High-Speed Operation Load Detection Time

Program ⇒ Special Control Parameters ⇒ Crane/Hoist Settings ⇒ Express Speed Settings ⇒ **Light-Load High-Speed Operation Load Detection Time**

This parameter determines the length of time that the load requirement must meet the **Light-Load High-Speed** criteria before the **Light-Load High-Speed Enable** (**F330**) is recognized.

Once recognized, the timer setting of **F332** must expire to engage the **Light-Load High-Speed** function.

Direct Access Number — F333
Parameter Type — **Yes**
Factory Default — **1.0**
Changeable During Run — **Numerical**
Minimum — 0.0
Maximum — 10.0
Units — Seconds

Light-Load High-Speed Operation Heavy-Load Detection Time

Program ⇒ Special Control Parameters ⇒ Crane/Hoist Settings ⇒ Express Speed Settings ⇒ **Light-Load High-Speed Operation Heavy-Load Detection Time**

While operating in the **Light-Load High-Speed** mode, this parameter determines the length of time that a load exceeding the **Light-Load High-Speed** operation criteria may exist before the **Light-Load High-Speed** mode is terminated and normal operation resumes.

Direct Access Number — F334
Parameter Type — **Numerical**
Factory Default — **5.0**
Changeable During Run — **Yes**
Minimum — 0.0
Maximum — 10.0
Units — Seconds

Switching Load Torque During Forward-Run

Program ⇒ Special Control Parameters ⇒ Crane/Hoist Settings ⇒ Express Speed Settings ⇒ **Switching Load Torque During Forward Run**

While running forward, this parameter establishes the threshold torque level that is used to determine if the **Light-Load High-Speed** (**F331**) operation may engage or remain engaged if active.

If the **Light-Load High-Speed** operation is terminated normal operation resumes.

Direct Access Number — F335
Parameter Type — **Numerical**
Factory Default — **50**
Changeable During Run — **No**
Minimum — 0
Maximum — 250
Units — %

Heavy-Load Torque During Forward Acceleration

Program ⇒ Special Control Parameters ⇒ Crane/Hoist Settings ⇒ Express Speed Settings ⇒ **Heavy-Load Torque During Forward Acceleration**

During forward acceleration, this parameter establishes the threshold torque level that is used to determine if the **Light-Load High-Speed** (**F331**) operation may engage or remain engaged if active.

If the **Light-Load High-Speed** operation is terminated normal operation resumes.

Direct Access Number — F336
Parameter Type — **Numerical**
Factory Default — **150**
Changeable During Run — **Yes**
Minimum — 0
Maximum — 250
Units — %

Heavy-Load Torque During Forward Deceleration

Program ⇒ Special Control Parameters ⇒ Crane/Hoist Settings ⇒ Express Speed Settings ⇒ **Heavy-Load Torque During Forward Deceleration**

During forward deceleration, this parameter establishes the threshold torque level that is used to determine if the **Light-Load High-Speed** (**F331**) operation may engage or remain engaged if active.

If the **Light-Load High-Speed** operation is terminated normal operation resumes.

Direct Access Number — F337

Parameter Type — **Numerical**

Factory Default — **100**

Changeable During Run — **Yes**

Minimum — 0

Maximum — 250

Units — %

Switching Load Torque During Reverse-Run

Program ⇒ Special Control Parameters ⇒ Crane/Hoist Settings ⇒ Express Speed Settings ⇒ **Switching Load Torque During Reverse Run**

While running in reverse, this parameter establishes the threshold torque level that is used to determine if the **Light-Load High-Speed** (**F331**) operation may engage or remain engaged if active.

If the **Light-Load High-Speed** operation is terminated normal operation resumes.

Direct Access Number — F338

Parameter Type — **Numerical**

Factory Default — **50**

Changeable During Run — **Yes**

Minimum — 0

Maximum — 250

Units — %

Heavy-Load Torque During Reverse Acceleration

Program ⇒ Special Control Parameters ⇒ Crane/Hoist Settings ⇒ Express Speed Settings ⇒ **Heavy-Load Torque During Reverse Acceleration**

During reverse acceleration, this parameter establishes the threshold torque level that is used to determine if the **Light-Load High-Speed** (**F331**) operation may engage or remain engaged if active.

If the **Light-Load High-Speed** operation is terminated normal operation resumes.

Direct Access Number — F339

Parameter Type — **Numerical**

Factory Default — **150**

Changeable During Run — **Yes**

Minimum — 0

Maximum — 250

Units — %

Heavy-Load Torque During Reverse Deceleration

Program ⇒ Special Control Parameters ⇒ Crane/Hoist Settings ⇒ Express Speed Settings ⇒ **Heavy-Load Torque During Reverse Deceleration**

During reverse deceleration, this parameter establishes the threshold torque level that is used to determine if the **Light-Load High-Speed** (**F331**) operation may engage or remain engaged if active.

If the **Light-Load High-Speed** operation is terminated normal operation resumes.

Direct Access Number — F340

Parameter Type — **Numerical**

Factory Default — **100**

Changeable During Run — **Yes**

Minimum — 0

Maximum — 250

Units — %

Frequency for Automatic High-Speed Operation at Light-Load

Program ⇒ Special Control Parameters ⇒ Crane/Hoist Settings ⇒ Express Speed Settings ⇒ **Frequency for Automatic High-Speed Operation at Light-Load**

This parameter establishes the speed that the ASD will ramp to when operating in the **Light-Load High-Speed** mode.

Direct Access Number — F341

Parameter Type — **Numerical**

Factory Default — **80**

Changeable During Run — **Yes**

Minimum — 0.00

Maximum — 80.00

Units — %

On-Trip Powerline Switching

Program ⇒ Terminal Selection Parameters ⇒ **Line Power Switching**

This parameter **Enables/Disables** the **On Trip Powerline Switching** feature. When enabled, the system is instructed to discontinue using the output of the drive and to switch to the commercial power in the event of a trip.

Settings:

Disabled
Enabled (box checked)

Direct Access Number — F354

Parameter Type — **Check Box**

Factory Default — **Disabled**

Changeable During Run — **No**

At-Frequency Powerline Switching

Program ⇒ Terminal Selection Parameters ⇒ **Line Power Switching**

When enabled, this parameter sets the frequency at which the **At Frequency Powerline Switching** function engages. The **At Frequency Powerline Switching** function commands the system to discontinue using the output of the drive and to switch to commercial power once reaching the frequency set here.

Direct Access Number — F355

Parameter Type — **Numerical**

Factory Default — **60.00**

Changeable During Run — **Yes**

Minimum — 0.00

Maximum — **Max. Freq.** (**F011**)

Units — Hz

ASD-side Switching Wait Time

Program ⇒ Terminal Selection Parameters ⇒ **Line Power Switching**

This parameter determines the amount of time that the drive will wait before outputting a signal to the motor once the switch-to-drive-output criteria has been met.

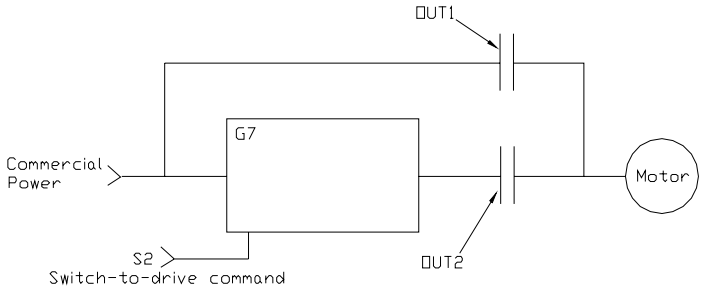

Direct Access Number — F356

Parameter Type — **Numerical**

Factory Default — **(ASD-dependent)**

Changeable During Run — **Yes**

Minimum — 0.01

Maximum — 10.00

Units — Seconds

Commercial Power Wait Time

Program ⇒ Terminal Selection Parameters ⇒ **Line Power Switching**

This parameter determines the amount of time that the drive will wait before allowing commercial power to be applied to the motor once the switch-to-commercial-power criteria has been met.

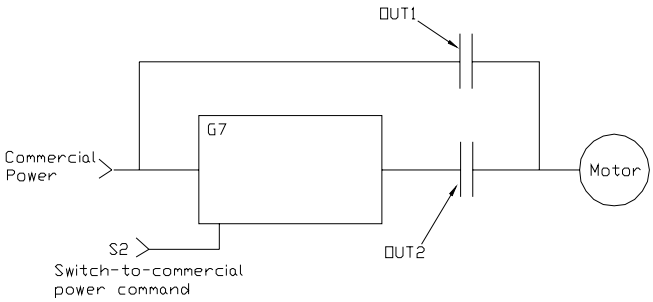

Direct Access Number — F357

Parameter Type — **Numerical**

Factory Default — **0.62**

Changeable During Run — **Yes**

Minimum — (ASD-dependent)

Maximum — 10.00

Units — Seconds

Commercial Power Switching Freq. Hold Time

Program ⇒ Terminal Selection Parameters ⇒ **Line Power Switching**

This parameter determines the amount of time that the connection to commercial power is maintained once the switch-to-drive-output criteria has been met.

Direct Access Number — F358
Parameter Type — **Numerical**
Factory Default — **2.00**
Changeable During Run — **Yes**
Minimum — 0.10
Maximum — 10.00
Units — Seconds

Feedback Source

Program ⇒ Feedback Parameters ⇒ **Feedback Settings**

This parameter **Enables/Disables PID** feedback control. When enabled, this parameter determines the source of the motor-control feedback.

Settings:

PID Control Disabled
VI/II
RR
RX
RX2 (option)

Proportional-Integral-Derivative (PID) — A closed-loop control technique that seeks error minimization by reacting to three values: One that is proportional to the error, one that is representative of the error, and one that is representative of the rate of change of the error.

Direct Access Number — F360
Parameter Type — **Selection List**
Factory Default — **Control Disabled**
Changeable During Run — **Yes**

Feedback Source Delay Filter

Program ⇒ Feedback Parameters ⇒ **Feedback Settings**

This parameter determines the delay in the ASD output response to the motor-control feedback signal (signal source is selected at **F360**).

Direct Access Number — F361
Parameter Type — **Numerical**
Factory Default — **0**
Changeable During Run — **Yes**
Minimum — 0
Maximum — 255

Proportional (P) Gain

Program ⇒ Feedback Parameters ⇒ **Feedback Settings**

This parameter determines the degree that the **Proportional** function affects the output signal. The larger the value entered here, the quicker the drive responds to changes in feedback.

Direct Access Number — F362
Parameter Type — **Numerical**
Factory Default — **0.10**
Changeable During Run — **Yes**
Minimum — 0.01
Maximum — 100.0

Integral (I) Gain

Program ⇒ Feedback Parameters ⇒ **Feedback Settings**

This parameter determines the degree that the **Integral** function affects the output signal. The smaller the value here, the more pronounced the effect of the integral function on the output signal.

Direct Access Number — F363
Parameter Type — **Numerical**
Factory Default — **0.10**
Changeable During Run — **Yes**
Minimum — 0.01
Maximum — 100.0

Upper Deviation Limits

Program ⇒ Feedback Parameters ⇒ **Feedback Settings**

This parameter determines the maximum amount that the feedback may increase the output signal.

Direct Access Number — F364
Parameter Type — **Numerical**
Factory Default — **50.00**
Changeable During Run — **Yes**
Minimum — 0.00
Maximum — 50.00
Units — %

Lower Deviation Limits

Program ⇒ Feedback Parameters ⇒ **Feedback Settings**

This parameter determines the maximum amount that the feedback may decrease the output signal.

Direct Access Number — F365
Parameter Type — **Numerical**
Factory Default — **50.00**
Changeable During Run — **Yes**
Minimum — 0.00
Maximum — 50.00
Units — %

Feedback Settings Differential (D) Gain

Program ⇒ Feedback Parameters ⇒ **Feedback Settings**

This parameter determines the degree that the **Differential** function affects the output signal. The larger the value entered here, the more pronounced the affect of the differential function for a given feedback signal level.

Direct Access Number — F366
Parameter Type — **Numerical**
Factory Default — **0.00**
Changeable During Run — **Yes**
Minimum — 0.0
Maximum — 2.55

Number of PG Input Pulses

Program ⇒ Feedback Parameters ⇒ **PG Settings**

This parameter is used to set the end-of-travel range when using an encoder on a motor-driven positioning system (e.g., hoist/crane, etc.).

Direct Access Number — F367
Parameter Type — **Numerical**
Factory Default — **500**
Changeable During Run — **No**
Minimum — 1
Maximum — 9999
Units — Pulse Count

PG Input Phases

Program ⇒ Feedback Parameters ⇒ **PG Settings**

This parameter determines the type of information that is supplied by the phase encoder.

Settings:

1 — Speed
2 — Speed and Direction

Direct Access Number — F368
Parameter Type — **Selection List**
Factory Default — **2**
Changeable During Run — **No**
Minimum — 1
Maximum — 2
Units — Phase Count

PG Disconnect Detection

Program ⇒ Feedback Parameters ⇒ **PG Settings**

This parameter **Enables/Disables** the system's monitoring of the PG connection status when using encoders with line driver outputs.

Settings:

Disabled
Enabled

Direct Access Number — F369
Parameter Type — **Selection List**
Factory Default — **Disabled**
Changeable During Run — **No**

Electronic Gear Setting

Program ⇒ Feedback Parameters ⇒ **PG Settings**

This parameter sets the number of pulses per revolution when using a shaft-mounted encoder and the **PG Option Board** for closed loop speed control.

Direct Access Number — F370
Parameter Type — **Numerical**
Factory Default — **1000**
Changeable During Run — **No**
Minimum — 100
Maximum — 4000

Position Loop Gain

Program ⇒ Feedback Parameters ⇒ **PG Settings**

This parameter provides a divisor for the pulse input when operating in the **Pulse Control** mode.

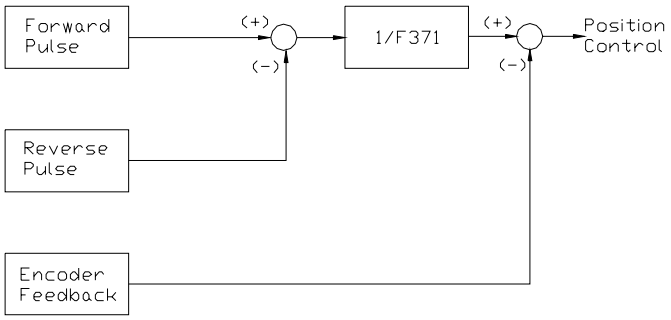

Direct Access Number — F371
Parameter Type — **Numerical**
Factory Default — **4.00**
Changeable During Run — **Yes**
Minimum — 0.0
Maximum — 100.0

Position Completion Range

Program ⇒ Feedback Parameters ⇒ **PG Settings**

During a deceleration ramp, this parameter sets a speed range that must be attained before the **Stop** command may be executed.

Direct Access Number — F372
Parameter Type — **Numerical**
Factory Default — **100**
Changeable During Run — **Yes**
Minimum — 1
Maximum — 4000

Frequency Limit at Position

Program ⇒ Feedback Parameters ⇒ **PG Settings**

While operating in the **Position-Control** mode and using **PG** feedback, this setting determines the maximum acceleration rate in Hz/second.

Direct Access Number — F373
Parameter Type — **Numerical**
Factory Default — **800**
Changeable During Run — **Yes**
Minimum — 1
Maximum — 8001
Units — Hz/Second

Current Control Proportional Gain

Program ⇒ Feedback Parameters ⇒ **PG Settings**

This parameter sets the sensitivity of the drive when monitoring the output current to control speed. The larger the value entered here, the more sensitive the drive is to changes in the received feedback.

Direct Access Number — F374
Parameter Type — **Numerical**
Factory Default — **(ASD-dependent)**
Changeable During Run — **No**
Minimum — 100.0
Maximum — 1000

Current Control Integral Gain

Program ⇒ Feedback Parameters ⇒ **PG Settings**

This parameter sets the degree and rate at which the output frequency will be allowed to change when prompted by changes in the output current.

The larger the value entered here, the quicker/more the drive responds to changes in feedback.

Direct Access Number — F375
Parameter Type — **Numerical**
Factory Default — **(ASD-dependent)**
Changeable During Run — **No**
Minimum — 100.0
Maximum — 1250

Speed Loop Proportional Gain

Program ⇒ Feedback Parameters ⇒ **PG Settings**

This parameter sets the **Proportional Gain** (sensitivity) of the drive when monitoring the **PG** signal to control speed. The larger the value entered here, the more sensitive the drive is to changes in the received feedback and the quicker it responds.

Direct Access Number — F376
Parameter Type — **Numerical**
Factory Default — **(ASD-dependent)**
Changeable During Run — **Yes**
Minimum — 3.2
Maximum — 1000

Speed Loop Integral Gain

Program ⇒ Feedback Parameters ⇒ **PG Settings**

This parameter sets the response time of the **Speed Loop Integral Gain**. The smaller the value here, the more pronounced (quicker) the effect of the integral function.

Direct Access Number — F377
Parameter Type — **Numerical**
Factory Default — **(ASD-dependent)**
Changeable During Run — **Yes**
Minimum — 10.0
Maximum — 200.0

Motor Counter Data

Program ⇒ Feedback Parameters ⇒ **PG Settings**

This parameter sets the pulses-per-revolution displayed at the Monitor screen when using a shaft-mounted encoder for speed control. This setting is used for display purposes only and does not affect the speed control of the system.

If zero is selected here then the setting at F370 (Electronic Gear Setting) determines the pulses-per-revolution to be displayed at the Monitor screen.

Settings:

Selection 0 — F370 setting
Selection 1 — 256 pulses/revolution
Selection 2 — 512 pulses/revolution
Selection 3 — 1024 pulses/revolution
Selection 4 — 2048 pulses/revolution
Selection 5 — 4096 pulses/revolution

Direct Access Number — F378
Parameter Type — **Selection List**
Factory Default — **Selection 0**
Changeable During Run — **No**
Minimum — Selection 0
Maximum — Selection 5

Speed Loop Parameter Ratio

Program ⇒ Feedback Parameters ⇒ **PG Settings**

Contact Toshiba's Marketing Department for information on this parameter.

Direct Access Number — F379
Parameter Type — **Numerical**
Factory Default — **1.00**
Changeable During Run — **No**
Minimum — 0.01
Maximum — 10.00

Use Speed Mode

Program ⇒ Pattern Run Control Parameters ⇒ **Preset Speed Mode**

This parameter **Enables/Disables** the **Use Speed** mode. When enabled, the system uses all of the parameter settings of the **Preset Speed** being run. Otherwise, only the frequency setting is used.

Settings:

Disabled
Enabled (box checked)

Direct Access Number — F380
Parameter Type — **Check Box**
Factory Default — **Disabled**
Changeable During Run — **No**

Preset Speed Direction #1

Program ⇒ Pattern Run Control Parameters ⇒ **Preset Speeds**

Determines the forward/reverse setting for the **#1 Preset Speed** (**F018**).

Settings:

Forward
Reverse

Direct Access Number — F381
Parameter Type — **Selection List**
Factory Default — **Forward**
Changeable During Run — **No**

Preset Speed Direction #2

Program ⇒ Pattern Run Control Parameters ⇒ **Preset Speeds**

Determines the forward/reverse setting for the **#2 Preset Speed** (**F019**).

Settings:

Forward
Reverse

Direct Access Number — F382
Parameter Type — **Selection List**
Factory Default — **Forward**
Changeable During Run — **No**

Preset Speed Direction #3

Program ⇒ Pattern Run Control Parameters ⇒ **Preset Speeds**

Determines the forward/reverse setting for the **#3 Preset Speed** (**F020**).

Settings:

Forward
Reverse

Direct Access Number — F383
Parameter Type — **Selection List**
Factory Default — **Forward**
Changeable During Run — **No**

Preset Speed Direction #4

Program ⇒ Pattern Run Control Parameters ⇒ **Preset Speeds**

Determines the forward/reverse setting for the **#4 Preset Speed** (**F021**).

Settings:

Forward
Reverse

Direct Access Number — F384
Parameter Type — **Selection List**
Factory Default — **Forward**
Changeable During Run — **No**

Preset Speed Direction #5

Program ⇒ Pattern Run Control Parameters ⇒ **Preset Speeds**

Determines the forward/reverse setting for the **#5 Preset Speed** (**F022**).

Settings:

Forward
Reverse

Direct Access Number — F385
Parameter Type — **Selection List**
Factory Default — **Forward**
Changeable During Run — **No**

Preset Speed Direction #6

Program ⇒ Pattern Run Control Parameters ⇒ **Preset Speeds**

Determines the forward/reverse setting for the **#6 Preset Speed** (**F023**).

Settings:

Forward
Reverse

Direct Access Number — F386
Parameter Type — **Selection List**
Factory Default — **Forward**
Changeable During Run — **No**

Preset Speed Direction #7

Program ⇒ Pattern Run Control Parameters ⇒ **Preset Speeds**

Determines the forward/reverse setting for the **#7 Preset Speed** (**F024**).

Settings:

Forward
Reverse

Direct Access Number — F387
Parameter Type — **Selection List**
Factory Default — **Forward**
Changeable During Run — **No**

Preset Speed Direction #8

Program ⇒ Pattern Run Control Parameters ⇒ **Preset Speeds**

Determines the forward/reverse setting for the **#8 Preset Speed** (**F287**).

Settings:

Forward
Reverse

Direct Access Number — F388
Parameter Type — **Selection List**
Factory Default — **Forward**
Changeable During Run — **No**

Preset Speed Direction #9

Program ⇒ Pattern Run Control Parameters ⇒ **Preset Speeds**

Determines the forward/reverse setting for the **#9 Preset Speed** (**F288**).

Settings:

Forward
Reverse

Direct Access Number — F389
Parameter Type — **Selection List**
Factory Default — **Forward**
Changeable During Run — **No**

Preset Speed Direction #10

Program ⇒ Pattern Run Control Parameters ⇒ **Preset Speeds**

Determines the forward/reverse setting for the **#10 Preset Speed** (**F289**).

Settings:

Forward
Reverse

Direct Access Number — F390
Parameter Type — **Selection List**
Factory Default — **Forward**
Changeable During Run — **No**

Preset Speed Direction #11

Program ⇒ Pattern Run Control Parameters ⇒ **Preset Speeds**

Determines the forward/reverse setting for the **#11 Preset Speed** (**F290**).

Settings:

Forward
Reverse

Direct Access Number — F391
Parameter Type — **Selection List**
Factory Default — **Forward**
Changeable During Run — **No**

Preset Speed Direction #12

Program ⇒ Pattern Run Control Parameters ⇒ **Preset Speeds**

Determines the forward/reverse setting for the **#12 Preset Speed** (**F291**).

Settings:

Forward
Reverse

Direct Access Number — F392
Parameter Type — **Selection List**
Factory Default — **Forward**
Changeable During Run — **No**

Preset Speed Direction #13

Program ⇒ Pattern Run Control Parameters ⇒ **Preset Speeds**

Determines the forward/reverse setting for the **#13 Preset Speed** (**F292**).

Settings:

Forward
Reverse

Direct Access Number — F393
Parameter Type — **Selection List**
Factory Default — **Forward**
Changeable During Run — **No**

Preset Speed Direction #14

Program ⇒ Pattern Run Control Parameters ⇒ **Preset Speeds**

Determines the forward/reverse setting for the **#14 Preset Speed** (**F293**).

Settings:

Forward
Reverse

Direct Access Number — F394
Parameter Type — **Selection List**
Factory Default — **Forward**
Changeable During Run — **No**

Preset Speed Direction #15

Program ⇒ Pattern Run Control Parameters ⇒ **Preset Speeds**

Determines the forward/reverse setting for the **#15 Preset Speed** (**F294**).

Settings:

Forward
Reverse

Direct Access Number — F395
Parameter Type — **Selection List**
Factory Default — **Forward**
Changeable During Run — **No**

Vector Motor Model Autotune Command

Program ⇒ Motor Parameters ⇒ **Vector Motor Model**

This parameter sets the **Autotune** command status.

Settings:

Autotune Disabled
Reset Motor Defaults
Enable Autotune on Run Command

Direct Access Number — F400
Parameter Type — **Selection List**
Factory Default — **Autotune Disabled**
Changeable During Run — **No**

Vector Motor Model Slip Frequency Gain

Program ⇒ Motor Parameters ⇒ **Vector Motor Model**

This parameter provides a degree of slip compensation for a given load. A higher setting here decreases the slip allowed for a given load/ASD output ratio.

Direct Access Number — F401
Parameter Type — **Numerical**
Factory Default — **0.60**
Changeable During Run — **Yes**
Minimum — 0.00
Maximum — 2.55

Motor Constant 1 (primary resistance)

Program ⇒ Motor Parameters ⇒ **Vector Motor Model**

This parameter is the measurement of the stator resistance and is considered a **Motor Constant** (unchanging). This value is used in conjunction with other constants to tune the motor.

To use **Vector Control**, **Automatic Torque Boost**, or **Automatic Energy-saving**, the **Motor Constant** setting (motor tuning) is required.

Direct Access Number — F402
Parameter Type — **Numerical**
Factory Default — **(ASD-dependent)**
Changeable During Run — **No**
Minimum — 0.0
Maximum — 100,000 MΩ
Units — Ω

Motor Constant 2 (secondary resistance)

Program ⇒ Motor Parameters ⇒ **Vector Motor Model**

This parameter is the measurement of the rotor resistance and is considered a **Motor Constant** (unchanging). This value is used in conjunction with other constants to tune the motor.

This setting (motor tuning) is required to use the **Vector Control**, **Automatic Torque Boost**, or **Automatic Energy-saving** functions.

Direct Access Number — F403
Parameter Type — **Numerical**
Factory Default — **(ASD-dependent)**
Changeable During Run — **No**
Minimum — 0.00
Maximum — Open
Units — Ω

Motor Constant 3 (exciting inductance)

Program ⇒ Motor Parameters ⇒ **Vector Motor Model**

This parameter is used to input the excitation inductance for the motor. This value is used in conjunction with other constants to tune the motor.

This setting (motor tuning) is required to use the **Vector Control**, **Automatic Torque Boost**, or **Automatic Energy-saving** functions.

Direct Access Number — F404
Parameter Type — **Numerical**
Factory Default — **(ASD-dependent)**
Changeable During Run — **No**
Minimum — 0.00
Maximum — 6500.0
Units — µH

Motor Constant 4 (load inertia)

Program ⇒ Motor Parameters ⇒ **Vector Motor Model**

This parameter is used to control the load inertia during speed changes. Acceleration and deceleration overshoot may be reduced by increasing this value.

This setting (motor tuning) is required to use the **Vector Control**, **Automatic Torque Boost**, or **Automatic Energy-saving** functions.

Direct Access Number — F405
Parameter Type — **Numerical**
Factory Default — **1.0**
Changeable During Run — **Yes**
Minimum — 0.0
Maximum — 100.0

Motor Constant 5 (leakage inductance)

Program ⇒ Motor Parameters ⇒ **Vector Motor Model**

This parameter provides slight increases in the output voltage of the drive at the high speed range.

This setting (motor tuning) is required to use the **Vector Control**, **Automatic Torque Boost**, or **Automatic Energy-saving** functions.

Direct Access Number — F410
Parameter Type — **Numerical**
Factory Default — **(ASD-dependent)**
Changeable During Run — **No**
Minimum — 0.00
Maximum — 650.0

Number of Poles of Motor

Program ⇒ Motor Parameters ⇒ **Motor Settings**

This parameter identifies the number of motor poles.

Direct Access Number — F411
Parameter Type — **Numerical**
Factory Default — **4**
Changeable During Run — **No**
Minimum — 2
Maximum — 16

Motor Capacity

Program ⇒ Motor Parameters ⇒ **Motor Settings**

This parameter identifies the wattage rating of the motor.

Direct Access Number — F412

Parameter Type — **Numerical**

Factory Default — **(ASD-dependent)**

Changeable During Run — **No**

Minimum — 0.10

Maximum — (ASD-dependent)

Units — kW

Motor Type

Program ⇒ Motor Parameters ⇒ **Motor Settings**

This parameter identifies the type of motor being used.

Settings:

Toshiba EQP III TEFC
Toshiba EQP III ODP
Toshiba EPACT TEFC
Toshiba EPACT ODP
Other Motor

Direct Access Number — F413

Parameter Type — **Selection List**

Factory Default — **Toshiba EQP III TEFC**

Changeable During Run — **No**

Motor Constant 3 Enable

Program ⇒ Motor Parameters ⇒ **Vector Motor Model**

This parameter **Enables/Disables** tuning of **Motor Constant 3** during an **Autotune**.

Settings:

Disabled
Enabled (box checked)

Direct Access Number — F414

Parameter Type — **Check Box**

Factory Default — **Enable**

Changeable During Run — **No**

Torque Command

Program ⇒ Torque Setting Parameters ⇒ **Torque Control**

When operating in the **Torque Control** mode, this parameter allows the user to select the source of the torque command signal.

Settings:

VI/II
RR
RX
RX2 (option)
LED Keypad Option
Binary/BCD Input
Common Serial (TTL)
RS232/RS485
Communication Card

Direct Access Number — F420

Parameter Type — **Selection List**

Factory Default — **RX**

Changeable During Run — **Yes**

Torque Command Filter

Program ⇒ Torque Setting Parameters ⇒ **Torque Control**

This parameter reduces the motor vibration caused by large-inertia loads. A small value will have a great effect while an increased value will have a lesser effect.

Direct Access Number — F421

Parameter Type — **Numerical**

Factory Default — **200.0**

Changeable During Run — **Yes**

Minimum — 10.0

Maximum — 200.0

Synchronized Torque Bias Input

Program ⇒ Torque Setting Parameters ⇒ **Torque Control**

Direct Access Number — F422

Parameter Type — **Selection list**

Factory Default — **Disabled**

Changeable During Run — **Yes**

This parameter **Enables/Disables** the **Synchronized Torque Bias** input function. When enabled, this parameter identifies the source of the **Synchronized Torque Bias** input signal.

Settings:

Disabled
VI/II
RR
RX
RX2 (option)
LED Keypad Option
Binary/BCD Input
Common Serial (TTL)
RS232/RS485
Communication Card

Tension Torque Bias Input

Program ⇒ Torque Setting Parameters ⇒ **Torque Control**

Direct Access Number — F423

Parameter Type — **Selection List**

Factory Default — **Disabled**

Changeable During Run — **Yes**

This parameter **Enables/Disables** the **Tension Torque Bias** input function and identifies the source of the **Tension Torque Bias** input signal when enabled.

Settings:

Disabled
VI/II
RR
RX
RX2 (option)
LED Keypad Option
Binary/BCD Input
Common Serial (TTL)
RS232/RS485
Communication Card

Load Sharing Gain Input

Program ⇒ Torque Setting Parameters ⇒ **Torque Control**

Direct Access Number — F424

Parameter Type — **Selection List**

Factory Default — **Disabled**

Changeable During Run — **Yes**

This parameter **Enables/Disables** the **Load Sharing Gain** input function and is enabled by selecting a **Load Sharing Gain** input signal source.

Settings:

Disabled
VI/II
RR
RX
RX2 (option)
LED Keypad Option
Binary/BCD Input
Common Serial (TTL)
RS232/RS485
Communication Card

Forward Speed Limit Input

Program ⇒ Torque Setting Parameters ⇒ **Torque Speed Limiting**

This parameter **Enables/Disables** the **Forward Speed Limit Input** control function. When enabled and operating in the **Torque Control** mode, the forward speed limit is controlled by the terminal selected here. If **Setting** is selected, the value set at **F426** is used as the **Forward Speed Limit** input.

Settings:

Disabled
VI/II
RR
RX
RX2 (option)
Setting

Direct Access Number — F425
Parameter Type — **Selection List**
Factory Default — **Disabled**
Changeable During Run — **Yes**

Forward Speed Limit Level

Program ⇒ Torque Setting Parameters ⇒ **Torque Control**

This parameter provides a value to be used as the **Forward Speed Limit** setting if **Setting** is selected at **F425**.

Direct Access Number — F426
Parameter Type — **Numerical**
Factory Default — **80.0**
Changeable During Run — **Yes**
Minimum — 0.00
Maximum — **Upper Limit** (**F012**)
Units — Hz

Reverse Speed Limit Input

Program ⇒ Torque Setting Parameters ⇒ **Torque Control**

This parameter **Enables/Disables** the **Reverse Speed Limit Input** control function. When enabled and operating in the **Torque Control** mode, the reverse speed limit is controlled by the terminal selected here. If **Setting** is selected, the value set at **F428** is used as the **Reverse Speed Limit** input.

Settings:

Disabled
VI/II
RR
RX
RX2 (option)
Setting

Direct Access Number — F427
Parameter Type — **Selection List**
Factory Default — **Disabled**
Changeable During Run — **Yes**

Reverse Speed Limit Level

Program ⇒ Torque Setting Parameters ⇒ **Torque Control**

This parameter provides a value to be used as the **Reverse Speed Limit** setting if **Setting** is selected at **F427**.

Direct Access Number — F428
Parameter Type — **Numerical**
Factory Default — **80.0**
Changeable During Run — **Yes**
Minimum — 0.00
Maximum — **Upper Limit** (**F012**)
Units — Hz

Torque Command Mode

Program ⇒ Torque Setting Parameters ⇒ **Torque Speed Limiting**

This parameter specifies whether the torque command function is to be used in one direction or both (F/R).

Settings:

Fixed Direction
F/R Permitted

Direct Access Number — F429
Parameter Type — **Selection List**
Factory Default — **Fixed Direction**
Changeable During Run — **No**

Speed Limit (torque) Reference

Program ⇒ Torque Setting Parameters ⇒ **Torque Speed Limiting**

The system has the ability to limit the amount that the speed may vary as a function of a changing load while operating in the **Torque Control** mode. This parameter sets the input terminal that will be used to control the allowable speed variance.

Settings:

None
VI/II
RR
RX
RX2 (option)
Fixed

Direct Access Number — F430
Parameter Type — **Selection List**
Factory Default — **None**
Changeable During Run — **Yes**

Speed Limit Torque Level

Program ⇒ Torque Setting Parameters ⇒ **Torque Speed Limiting**

The system has the ability to limit the amount that the speed may vary as a function of a changing load while operating in the **Torque Control** mode. This parameter sets the targeted speed. The plus-or-minus value (range) for this setting may be set at **F432**.

Direct Access Number — F431
Parameter Type — **Numerical**
Factory Default — **0.00**
Changeable During Run — **Yes**
Minimum — 0.00
Maximum — **Max. Freq.** (**F011**)
Units — Hz

Speed Limit Torque Range

Program ⇒ Torque Setting Parameters ⇒ **Torque Speed Limiting**

The system has the ability to limit the amount that the speed may vary as a function of a changing load while operating in the **Torque Control** mode. This parameter sets a plus-or-minus value (range) for the **Speed Limit Torque Level** (**F431**).

Direct Access Number — F432
Parameter Type — **Numerical**
Factory Default — **0.00**
Changeable During Run — **Yes**
Minimum — 0.00
Maximum — **Max. Freq.** (**F011**)
Units — Hz

Speed Limit Torque Recovery

Program ⇒ Torque Setting Parameters ⇒ **Torque Speed Limiting**

The system has the ability to limit the amount that the speed may vary as a function of a changing load while operating in the **Torque Control** mode. This parameter sets the response time of the system to torque change requirements.

Direct Access Number — F433
Parameter Type — **Numerical**
Factory Default — **0.20**
Changeable During Run — **No**
Minimum — 0.00
Maximum — 2.50
Units — Seconds

Power Running Torque Limit #1

Program ⇒ Torque Setting Parameters ⇒ **Torque Limit Settings**

This parameter determines the source of the control signal for the positive torque limit setting. If **Setting** is selected, the value set at **F441** is used as the **Power Running Torque Limit #1** input.

Settings:

VI/II
RR
RX
RX2 (option)
Setting

Direct Access Number — F440
Parameter Type — **Selection List**
Factory Default — **Setting**
Changeable During Run — **Yes**

Driving Torque Limit #1

Program ⇒ Torque Setting Parameters ⇒ **Manual Torque Limit Settings**

This parameter provides a value for the **Power Running Torque Limit #1** setting if **Setting** is selected at **F440**. This value provides the positive torque upper limit for the #1 motor.

Direct Access Number — F441
Parameter Type — **Numerical**
Factory Default — **250.0**
Changeable During Run — **Yes**
Minimum — 0.00
Maximum — 250.0
Units — %

Regeneration Torque Limit #1

Program ⇒ Torque Setting Parameters ⇒ **Torque Limit Settings**

This parameter determines the source of the **Regenerative Torque Limit** control signal. If **Setting** is selected, the value set at **F443** is used for this parameter.

Settings:

VI/II
RR
RX
RX2 (option)
Setting

Direct Access Number — F442
Parameter Type — **Selection List**
Factory Default — **Setting**
Changeable During Run — **Yes**

Regeneration Torque Limit Setting #1

Program ⇒ Torque Setting Parameters ⇒ Torque Limit Settings ⇒ **Manual Settings**

This parameter provides a value to be used as the **Regeneration Torque Limit #1** if **Setting** is selected at **F442**.

Direct Access Number — F443
Parameter Type — **Numerical**
Factory Default — **250.0**
Changeable During Run — **Yes**
Minimum — 0.00
Maximum — 250.0
Units — %

Driving Torque Limit #2

Program ⇒ Torque Setting Parameters ⇒ **Manual Torque Limit Settings**

This parameter is used to set the positive torque upper limit for the #2 motor profile when multiple motors are controlled by a single drive or when a single motor is to be controlled by multiple profiles.

Direct Access Number — F444
Parameter Type — **Numerical**
Factory Default — **250.0**
Changeable During Run — **Yes**
Minimum — 0.00
Maximum — 250.0
Units — %

Regeneration Torque Limit #2

Program ⇒ Torque Setting Parameters ⇒ **Manual Torque Limit Settings**

This parameter is used to set the negative torque upper limit for the #2 motor profile when multiple motors are controlled by a single drive or when a single motor is to be controlled by multiple profiles.

Direct Access Number — F445
Parameter Type — **Numerical**
Factory Default — **250.0**
Changeable During Run — **Yes**
Minimum — 0.00
Maximum — 250.0
Units — %

Driving Torque Limit #3

Program ⇒ Torque Setting Parameters ⇒ **Manual Torque Limit Settings**

This parameter is used to set the positive torque upper limit for the #3 motor profile when multiple motors are controlled by a single drive or when a single motor is to be controlled by multiple profiles.

Direct Access Number — F446
Parameter Type — **Numerical**
Factory Default — **250.0**
Changeable During Run — **Yes**
Minimum — 0.00
Maximum — 250.0
Units — %

Regeneration Torque Limit #3

Program ⇒ Torque Setting Parameters ⇒ **Manual Torque Limit Settings**

This parameter is used to set the negative torque upper limit for the #3 motor profile when multiple motors are controlled by a single drive or when a single motor is to be controlled by multiple profiles.

Direct Access Number — F447
Parameter Type — **Numerical**
Factory Default — **250.0**
Changeable During Run — **Yes**
Minimum — 0.00
Maximum — 250.0
Units — %

Driving Torque Limit #4

Program ⇒ Torque Setting Parameters ⇒ **Manual Torque Limit Settings**

This parameter is used to set the positive torque upper limit for the #4 motor profile when multiple motors are controlled by a single drive or when a single motor is to be controlled by multiple profiles.

Direct Access Number — F448
Parameter Type — **Numerical**
Factory Default — **250.0**
Changeable During Run — **Yes**
Minimum — 0.00
Maximum — 250.0
Units — %

Regeneration Torque Limit #4

Program ⇒ Torque Setting Parameters ⇒ **Manual Torque Limit Settings**

This parameter is used to set the negative torque upper limit for the #4 motor profile when multiple motors are controlled by a single drive or when a single motor is to be controlled by multiple profiles.

Direct Access Number — F449
Parameter Type — **Numerical**
Factory Default — **250.0**
Changeable During Run — **Yes**
Minimum — 0.00
Maximum — 250.0
Units — %

Torque Limit Mode

Program ⇒ Torque Setting Parameters ⇒ Torque Limit Settings ⇒ **Torque Limit Mode**

Contact Toshiba's Marketing Department for information on this parameter.

Settings:

Driving/Regen
Positive/Negative

Direct Access Number — F450
Parameter Type — **Selection List**
Factory Default — **Driving/Regen**
Changeable During Run — **No**

Torque Limit Mode (Speed Dependent)

Program ⇒ Torque Setting Parameters ⇒ Torque Limit Settings ⇒ **Torque Limit Mode (Speed Dependent)**

This parameter allows for either wide or very limited speed fluctuations while operating in the **Torque Control** mode.

The ASD output follows the commanded speed when **No Speed Cooperation** is selected and has a very limited speed fluctuation range when **Standard** is selected.

Settings:

Standard
No Speed Cooperation

Direct Access Number — F451

Parameter Type — **Selection List**

Factory Default — **Standard**

Changeable During Run — **Yes**

Continued Stall Until Trip During Power Operation

Program ⇒ Protection Parameters ⇒ Stall ⇒ **Continuing Stall Period**

This parameter allows the user to extend the **Overvoltage Stall** (**F305**) and the **Overcurrent Stall** (**F017**) time settings.

Direct Access Number — F452

Parameter Type — **Numerical**

Factory Default — **0.0**

Changeable During Run — **Yes**

Minimum — 0.0

Maximum — 1.00

Units — Seconds

Stall Prevention During Regeneration

Program ⇒ Protection Parameters ⇒ Stall ⇒ **Stall Prevention During Regeneration**

This parameter **Enables/Disables** the **Overvoltage Stall** (**F305**) and the **Overcurrent Stall** (**F017**) function during regeneration only. Application-specific conditions may occur that warrant disabling the **Stall** function during regeneration.

Settings:

With Stall Prevention
Without Stall Prevention

Direct Access Number — F453

Parameter Type — **Selection List**

Factory Default — **With Stall Prevention.**

Changeable During Run — **Yes**

Current Differential Gain

Program ⇒ Special Control Parameters ⇒ Special Parameters ⇒ **Current Differential Gain**

This parameter determines the degree that the current differential function affects the output signal. The larger the value entered here, the more pronounced the **Current Differential Gain**.

Direct Access Number — F454

Parameter Type — **Numerical**

Factory Default — **1.23**

Changeable During Run — **Yes**

Minimum — 0.00

Maximum — 327.6

VI/II Bias Adjust

Program ⇒ Frequency Setting Parameters ⇒ Speed Reference Setpoints ⇒ VI/II ⇒ **Bias**

This parameter is used to fine-tune the bias of the **VI/II** input terminals.

Note: *See note on pg. 46 for further information on the VI/II terminal.*

This setting may be used to ensure that the zero level of the input source (pot, pressure transducer, flow meter, etc.) is also the zero level setting of the ASD system.

This is accomplished by setting the input source to zero and either increasing or decreasing this setting to provide an output of zero from the ASD.

Direct Access Number — F470

Parameter Type — **Numerical**

Factory Default — **100**

Changeable During Run — **Yes**

Minimum — 0.0

Maximum — 255

VI/II Gain Adjust

Program ⇒ Frequency Setting Parameters ⇒ Speed Reference Setpoints ⇒ VI/II ⇒ **Gain**

This parameter is used to fine tune the gain of the **VI/II** input terminals.

Note: *See note on pg. 46 for further information on the VI/II terminal.*

This setting may be used to ensure that the 100% level of the input source (pot, pressure transducer, flow meter, etc.) is also the 100% level setting of the ASD system.

This is accomplished by setting the input source to 100% and either increasing or decreasing this setting to provide an output of 100% from the ASD.

Direct Access Number — F471

Parameter Type — **Numerical**

Factory Default — **50**

Changeable During Run — **Yes**

Minimum — 0.0

Maximum — 255

RR Bias Adjust

Program ⇒ Frequency Setting Parameters ⇒ Speed Reference Setpoints ⇒ RR ⇒ **Bias**

This parameter is used to fine tune the bias of the **RR** input terminal when this terminal is used as the control input while operating in the **Speed Control** or the **Torque Control** mode.

This setting may be used to ensure that the zero level of the input source (pot, pressure transducer, flow meter, etc.) is also the zero level setting of the ASD system.

This is accomplished by setting the input source to zero and either increasing or decreasing this setting to provide an output of zero from the ASD.

Direct Access Number — F472

Parameter Type — **Numerical**

Factory Default — **120**

Changeable During Run — **Yes**

Minimum — 0.0

Maximum — 255

RR Gain Adjust

Program ⇒ Frequency Setting Parameters ⇒ Speed Reference Setpoints ⇒ RR ⇒ **Gain**

This parameter is used to fine tune the gain of the **RR** input terminal when this terminal is used as the control input while operating in the **Speed Control** or the **Torque Control** mode.

This setting may be used to ensure that the 100% level of the input source (pot, pressure transducer, flow meter, etc.) is also the 100% level setting of the ASD system.

This is accomplished by setting the input source to 100% and either increasing or decreasing this setting to provide an output of 100% from the ASD.

Direct Access Number — F473

Parameter Type — **Numerical**

Factory Default — **61**

Changeable During Run — **Yes**

Minimum — 0.0

Maximum — 255

RX Bias Adjust

Program ⇒ Frequency Setting Parameters ⇒ Speed Reference Setpoints ⇒ RX ⇒ **Bias**

This parameter is used to fine tune the bias of the **RX** input terminal when this terminal is used as the control input while operating in the **Speed Control** or the **Torque Control** mode.

This setting may be used to ensure that the zero level of the input source (pot, pressure transducer, flow meter, etc.) is also the zero level setting of the ASD system.

This is accomplished by setting the input source to zero and either increasing or decreasing this setting to provide an output of zero from the ASD.

Direct Access Number — F474

Parameter Type — **Numerical**

Factory Default — **99**

Changeable During Run — **Yes**

Minimum — 0.0

Maximum — 255

RX Gain Adjust

Program ⇒ Frequency Setting Parameters ⇒ Speed Reference Setpoints ⇒ RX ⇒ **Gain**

This parameter is used to fine tune the gain of the **RX** input terminal when this terminal is used as the control input while operating in the **Speed Control** or the **Torque Control** mode.

This setting may be used to ensure that the 100% level of the input source (pot, pressure transducer, flow meter, etc.) is also the 100% level setting of the ASD system.

This is accomplished by setting the input source to 100% and either increasing or decreasing this setting to provide an output of 100% from the ASD.

Direct Access Number — F475

Parameter Type — **Numerical**

Factory Default — **141**

Changeable During Run — **Yes**

Minimum — 0.0

Maximum — 255

RX2 Bias Adjust

Program ⇒ Frequency Setting Parameters ⇒ Speed Reference Setpoints ⇒ RX2 ⇒ **Bias**

This parameter is used to fine tune the bias of the **RX2** input terminal when this terminal is used as the control input while operating in the **Speed Control** or the **Torque Control** mode.

This setting may be used to ensure that the zero level of the input source (pot, pressure transducer, flow meter, etc.) is also the zero level setting of the ASD system.

This is accomplished by setting the input source to zero and either increasing or decreasing this setting to provide a zero output from the ASD.

Direct Access Number — F476

Parameter Type — **Numerical**

Factory Default — **99**

Changeable During Run — **Yes**

Minimum — 0.0

Maximum — 255

RX2 Gain Adjust

Program ⇒ Frequency Setting Parameters ⇒ Speed Reference Setpoints ⇒ RX2 ⇒ **Gain**

This parameter is used to fine tune the gain of the **RX2** input terminal when this terminal is used as the control input while operating in the **Speed Control** or the **Torque Control** mode.

This setting may be used to ensure that the 100% level of the input source (pot, pressure transducer, flow meter, etc.) is also the 100% level setting of the ASD system.

This is accomplished by setting the input source to 100% and either increasing or decreasing this setting to provide an output of 100% from the ASD.

Direct Access Number — F477

Parameter Type — **Numerical**

Factory Default — **141**

Changeable During Run — **Yes**

Minimum — 0.0

Maximum — 255

Exciting Strengthening Coefficient

Program ⇒ Special Control Parameters ⇒ Special Parameters⇒ **Exciting Strengthening Coefficient**

This parameter determines the rate at which the excitation current is allowed to go from zero to saturation and is enabled at **F481**.

Direct Access Number — F480

Parameter Type — **Numerical**

Factory Default — **64**

Changeable During Run — **Yes**

Minimum — 0

Maximum — 255

Over Exciting Cooperation

Program ⇒ Special Control Parameters ⇒ Special Parameters⇒ **Over-Exciting Cooperation**

This parameter determines the method used to control the rate that the excitation current is allowed to reach saturation. If **Effective** is selected, the preset **Torque Control** or **Speed Control** settings will determine the rate that the motor reaches excitation saturation.

Settings:

Effective
Applied by **F480**

Direct Access Number — F481
Parameter Type — **Selection List**
Factory Default — **Effective**
Changeable During Run — **Yes**

Current Vector Control

Program ⇒ Special Control Parameters ⇒ Special Parameters⇒ Control Margin Modulation ⇒ **% Current Vector Control**

This parameter establishes the control margin of modulation when operating in the **Current Vector Control** mode.

Direct Access Number — F482
Parameter Type — **Numerical**
Factory Default — **90.0**
Changeable During Run — **Yes**
Minimum — 80.0
Maximum — 300.0
Units — %

Voltage Vector Control

Program ⇒ Special Control Parameters ⇒ Special Parameters⇒ Control Margin Modulation ⇒ **% Voltage Vector Control**

This parameter establishes the control margin of modulation when operating in the **Voltage Vector Control** mode.

Direct Access Number — F483
Parameter Type — **Numerical**
Factory Default — **105.0**
Changeable During Run — **Yes**
Minimum — 80.0
Maximum — 300.0
Units — %

Constant Vector Control

Program ⇒ Special Control Parameters ⇒ Special Parameters⇒ Control Margin Modulation ⇒ **% Voltage Vector Control**

This parameter establishes the control margin of modulation when operating in the **Constant Vector Control** mode.

Direct Access Number — F484
Parameter Type — **Numerical**
Factory Default — **105.0**
Changeable During Run — **Yes**
Minimum — 80.0
Maximum — 300.0
Units — %

Stall Cooperation Gain at Field Weakening Zone

Program ⇒ Special Control Parameters ⇒ Special Parameters⇒ **Stall Cooperation Gain at Field Weakening Zone**

This parameter determines the degree that the **Stall** function is effective while operating the motor in the field weakening zone.

Direct Access Number — F485
Parameter Type — **Numerical**
Factory Default — **128**
Changeable During Run — **Yes**
Minimum — 0
Maximum — 255

Excitation Starting Rate

Program ⇒ Special Control Parameters ⇒ Special Parameters⇒ **Excitation Starting Rate**

This parameter establishes the rate of increase in the excitation current from a zero output of the ASD.

Direct Access Number — F486
Parameter Type — **Numerical**
Factory Default — **163.8**
Changeable During Run — **Yes**
Minimum — 1.64
Maximum — 327.6

Compensation Coefficient for Iron Loss

Program ⇒ Special Control Parameters ⇒ Special Parameters⇒ **Compensation Coefficient for Iron Loss**

This parameter compensates for losses in the rotor-to-stator coupling of the excitation and torque current energy.

Direct Access Number — F487

Parameter Type — **Numerical**

Factory Default — **105.0**

Changeable During Run — **Yes**

Minimum — 0

Maximum — 255

Voltage Compensation Coefficient for Dead Time

Program ⇒ Special Control Parameters ⇒ Special Parameters⇒ **Voltage Compensation Coefficient for Dead Time**

This parameter adjusts the degree of voltage compensation during dead time by increasing or decreasing the on-time of the programmed PWM just prior to the start of the dead time.

Direct Access Number — F488

Parameter Type — **Numerical**

Factory Default — **163.8**

Changeable During Run — **Yes**

Minimum — 1.64

Maximum — 327.6

Dead Time Compensation (Enable)

Program ⇒ Special Control Parameters ⇒ Special Parameters⇒ **Dead Time Compensation**

This parameter **Enables/Disables** the **Dead Time Compensation** function. The **Dead Time Compensation** feature provides a smoothing of the on-off IGBT signal that feeds the **Gate Driver** board during the off portion of the on-off cycle.

Settings:

Enabled
Disabled

Direct Access Number — F489

Parameter Type — **Selection List**

Factory Default — **Enabled**

Changeable During Run — **Yes**

Dead-time Compensation Bias

Program ⇒ Special Control Parameters ⇒ Special Parameters⇒ **Dead-time Compensation Bias**

This parameter sets a bias for the **Dead-time Compensation** function. The **Dead-time Compensation** feature provides a smoothing of the on-off IGBT signal that feeds the **Gate Driver** board.

Direct Access Number — F490

Parameter Type — **Numerical**

Factory Default — **0.000**

Changeable During Run — **Yes**

Minimum — -32.768

Maximum — 32.767

Switching Frequency of Current/Voltage Control

Program ⇒ Special Control Parameters ⇒ Special Parameters ⇒ **Switching Frequency between Current and Voltage Control**

This parameter sets the threshold frequency at which ASD control is switched between Current-control and Voltage -control.

Direct Access Number — F491

Parameter Type — **Numerical**

Factory Default — **40.00**

Changeable During Run — **Yes**

Minimum — 10.00

Maximum — 60.00

Units — Hz

Accel #2 Time

Program ⇒ Special Control Parameters ⇒ **#1 – #4 Settings**

This parameter specifies the time in seconds for the drive to go from 0.0 Hz to the **Maximum Frequency** for the **#2 Acceleration** profile. The accel/decel pattern may be set using **F502**. The minimum accel/decel time may be set using **F508**.

This setting is also used to determine the acceleration rate of the **Motorized Pot** function.

Note: *An acceleration time shorter than the load will allow may cause nuisance tripping and mechanical stress to loads.* ***Automatic Accel/Decel*** *and* ***Stall*** *settings may lengthen the acceleration time.*

Direct Access Number — F500

Parameter Type — **Numerical**

Factory Default — **(ASD-dependent)**

Changeable During Run — **Yes**

Minimum — 0.1

Maximum — 6000

Units — Seconds

Decel #2 Time

Program ⇒ Special Control Parameters ⇒ **Accel/Decel #1 – #4 Settings**

This parameter specifies the time in seconds for the drive to go from the **Maximum Frequency** to 0.0 Hz for the **#2 Deceleration** profile. The accel/decel pattern may be set using **F502**. The minimum accel/decel time may be set using **F508**.

This setting is also used to determine the deceleration rate of the **Motorized Pot** function.

Note: *A deceleration time shorter than the load will allow may cause nuisance tripping and mechanical stress to loads.* ***Automatic Accel/Decel*** *and* ***Stall*** *settings may lengthen the acceleration time.*

Direct Access Number — F501

Parameter Type — **Numerical**

Factory Default — **(ASD-dependent)**

Changeable During Run — **Yes**

Minimum — 0.1

Maximum — 6000

Units — Seconds

Accel/Decel Pattern #1

Program ⇒ Special Control Parameters ⇒ **Accel/Decel #1 – #4 Settings**

Direct Access Number — F502

Parameter Type — **Selection List**

Factory Default — **Linear**

Changeable During Run — **Yes**

This parameter enables a user-selected preprogrammed output profile that controls the acceleration and deceleration pattern for the **#1 Accel/Decel** parameter.

Settings:

Linear
S-Pattern 1
S-Pattern 2

The figures below provide a profile of the available accel/decel patterns.

Linear acceleration and deceleration is the default pattern and is used on most applications.

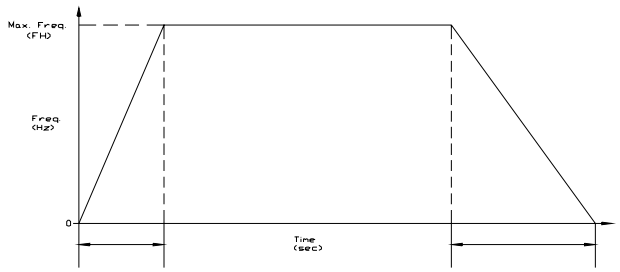

Linear Acceleration/Deceleration

S-pattern 1 is used for applications that require quick acceleration and deceleration. This setting is also popular for applications that require shock absorption at the start of acceleration or deceleration.

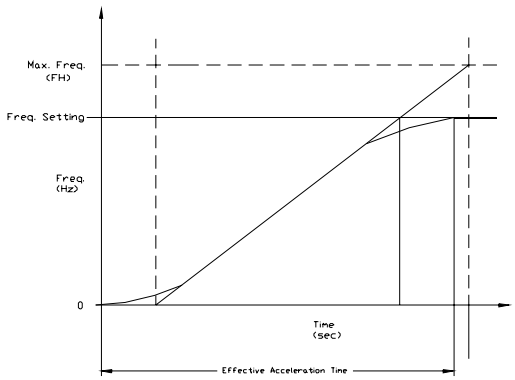

S-Pattern Acceleration/Deceleration 1

S-pattern 2 acceleration and deceleration decreases the rate of change above the base frequency.

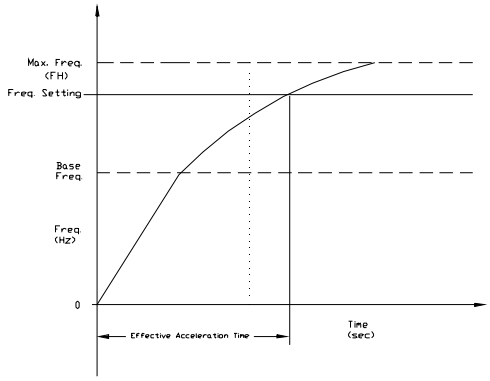

S-Pattern Acceleration/Deceleration 2

Accel/Decel Pattern #2

Program ⇒ Special Control Parameters ⇒ **1 – #4 Settings**

This parameter enables a user-selected preprogrammed output profile that controls the acceleration and deceleration pattern for the **#2 Accel/Decel** parameter.

Settings:

Linear
S-Pattern 1
S-Pattern 2

Direct Access Number — F503
Parameter Type — **Selection List**
Factory Default — **Linear**
Changeable During Run — **Yes**

Acc/Dec Group

No path available (Direct Access Only)

While operating using the **LED Keypad Option** this parameter selects the accel/decel profile to be used during a multiple-accel/decel profile configuration. The accel/decel setting for selections 1 – 4 may be found at **F009**, **F500**, **F510**, and **F514**, respectively.

Settings:

Group 1
Group 2
Group 3
Group 4

Note: *If using the **LCD EOI,** press **ESC** from the **Frequency Command** screen to access this parameter.*

Direct Access Number — F504
Parameter Type — **Selection List**
Factory Default — **1**
Changeable During Run — **Yes**

Acc/Dec Switching Frequency #1

Program ⇒ Special Control Parameters ⇒ **Accel/Decel Special**

This parameter sets the frequency at which the acceleration control is switched from the **Accel #1** profile to the **Accel #2** profile during a multiple-acceleration profile configuration.

Direct Access Number — F505
Parameter Type — **Numerical**
Factory Default — **0.00**
Changeable During Run — **Yes**
Minimum — 0.00
Maximum — **Max. Freq.** (**F011**)
Units — Hz

S-Pattern Lower Limit Adjustment

Program ⇒ Special Control Parameters ⇒ **Accel/Decel Special**

Sets the lower limit of **S-pattern 1** and **2**.

Direct Access Number — F506
Parameter Type — **Numerical**
Factory Default — **25.00**
Changeable During Run — **Yes**
Minimum — 0.00
Maximum — 50.00
Units — %

S-Pattern Upper Limit Adjustment

Program ⇒ Special Control Parameters ⇒ **Accel/Decel Special**

Sets the upper limit frequency of **S-pattern 1** and **2**.

Direct Access Number — F507
Parameter Type — **Numerical**
Factory Default — **25.00**
Changeable During Run — **Yes**
Minimum — 0.00
Maximum — 50.00
Units — %

Accel/Decel Lower Limit Time

Program ⇒ Special Control Parameters ⇒ **Accel/Decel Special**

This parameter sets the lower limit of the **Accel/Decel** time.

Direct Access Number — F508

Parameter Type — **Numerical**

Factory Default — **0.10**

Changeable During Run — **Yes**

Minimum — 0.01

Maximum — 10.00

Units — Seconds

Accel #3 Time

Program ⇒ Special Control Parameters ⇒ **Accel/Decel #1 – #4 Settings**

This parameter specifies the time in seconds for the drive to go from 0.0 Hz to the **Maximum Frequency** for the **#3 Acceleration** profile. The accel/decel pattern may be set using **F502**. The minimum accel/decel time may be set using **F508**.

Note: *An acceleration time shorter than the load will allow may cause nuisance tripping and mechanical stress to loads.* ***Automatic Accel/Decel*** *and* ***Stall*** *settings may lengthen the acceleration time.*

Direct Access Number — F510

Parameter Type — **Numerical**

Factory Default — **(ASD-dependent)**

Changeable During Run — **Yes**

Minimum — 0.1

Maximum — 6000

Units — Seconds

Decel #3 Time

Program ⇒ Special Control Parameters ⇒ **Accel/Decel #1 – #4 Settings**

This parameter specifies the time in seconds for the drive to go from the **Maximum Frequency** to 0.0 Hz for the **#3 Deceleration** profile.

The accel/decel pattern may be set using **F502**. The minimum accel/decel time may be set using **F508**.

Note: *A deceleration time shorter than the load will allow may cause nuisance tripping and mechanical stress to loads.* ***Automatic Accel/Decel*** *and* ***Stall*** *settings may lengthen the deceleration time.*

Direct Access Number — F511

Parameter Type — **Numerical**

Factory Default — **(ASD-dependent)**

Changeable During Run — **Yes**

Minimum — 0.1

Maximum — 6000

Units — Seconds

Accel/Decel Pattern #3

Program ⇒ Special Control Parameters ⇒ **Accel/Decel #1 – #4 Settings**

This parameter enables a user-selected preprogrammed output profile that controls the acceleration and deceleration pattern for the **#3 Accel/Decel** parameter.

Settings:

Linear
S-Pattern 1
S-Pattern 2

Direct Access Number — F512

Parameter Type — **Selection List**

Factory Default — **Linear**

Changeable During Run — **Yes**

Accel/Decel Switching Frequency #2

Program ⇒ Special Control Parameters ⇒ **Accel/Decel Special**

This parameter sets the frequency at which the acceleration control is switched from the **Accel #2** profile to the **Accel #3** profile during a multiple-acceleration profile configuration.

Direct Access Number — F513

Parameter Type — **Numerical**

Factory Default — **0.00**

Changeable During Run — **Yes**

Minimum — 0.00

Maximum — **Max. Freq. (F011)**

Units — Hz

Accel #4 Time

Program ⇒ Special Control Parameters ⇒ **Accel/Decel #1 – #4 Settings**

This parameter specifies the time in seconds for the drive to go from 0.0 Hz to the **Maximum Frequency** for the **#4 Acceleration** profile. The accel/decel pattern may be set using **F502**. The minimum accel/decel time may be set using **F508**.

Note: *An acceleration time shorter than the load will allow may cause nuisance tripping and mechanical stress to loads.* ***Automatic Accel/Decel*** *and* ***Stall*** *settings may lengthen the acceleration time.*

Direct Access Number — F514

Parameter Type — **Numerical**

Factory Default — **(ASD-dependent)**

Changeable During Run — **Yes**

Minimum — 0.1

Maximum — 6000

Units — Seconds

Decel #4 Time

Program ⇒ Special Control Parameters ⇒ **Accel/Decel #1 – #4 Settings**

This parameter specifies the time in seconds for the drive to go from the **Maximum Frequency** to 0.0 Hz for the **#4 Deceleration** profile. The accel/decel pattern may be set using **F502**. The minimum accel/decel time may be set using **F508**.

Note: *A deceleration time shorter than the load will allow may cause nuisance tripping and mechanical stress to loads.* ***Automatic Accel/Decel*** *and* ***Stall*** *settings may lengthen the deceleration time.*

Direct Access Number — F515

Parameter Type — **Numerical**

Factory Default — **(ASD-dependent)**

Changeable During Run — **Yes**

Minimum — 0.1

Maximum — 6000

Units — Seconds

Accel/Decel Pattern #4

Program ⇒ Special Control Parameters ⇒ **Accel/Decel #1 – #4 Settings**

This parameter enables a user-selected preprogrammed output profile that controls the acceleration and deceleration pattern for the **#4 Accel/Decel** parameter.

Settings:

Linear
S-Pattern 1
S-Pattern 2

Direct Access Number — F516

Parameter Type — **Selection List**

Factory Default — **Linear**

Changeable During Run — **Yes**

Accel/Decel Switching Frequency #3

Program ⇒ Special Control Parameters ⇒ **Accel/Decel Special**

This parameter sets the frequency at which the acceleration control is switched from the **Accel #3** profile to the **Accel #4** profile during a multiple-acceleration profile configuration.

Direct Access Number — F517

Parameter Type — **Numerical**

Factory Default — **0.00**

Changeable During Run — **Yes**

Minimum — 0.00

Maximum — **Max. Freq.** (**F011**)

Units — Hz

Pattern Run

Direct Access Number — F520

Parameter Type — **Check Box**

Factory Default — **Disabled**

Changeable During Run — **No**

Program ⇒ Pattern Run Control Parameters ⇒ **Pattern Run**

This parameter **Enables/Disables** the **Pattern Run** mode. When enabled, this feature allows up to 15 **Preset Speeds** to be run sequentially for a user-determined duration and number of times.

Settings:

Disabled
Enabled (box checked)

Pattern Run Description

User-defined **Preset Speeds** are labeled 1 – 15 (see **F018**). The ID number of any one of the fifteen frequencies (1 – 15) may be entered into the **Speed #** field of the **Pattern Run** screen and run for the number of times entered into the **Repeat** field (see **F530**). The execution of grouped **Preset Speeds** in this manner is called a **Pattern Run**.

Skip may be selected to ignore a **Speed #** field.

Pattern Run Setup

1. Configure an unused discrete input terminal for **Pattern #1** (2, 3, or 4). This terminal will initiate the selected **Pattern Run**. The input terminal settings may be configured via Program ⇒ Terminal Selection Parameters ⇒ **Input Terminals** (see Table 8 on pg. 76 for available input terminal settings).
2. Enable the **Pattern Run** mode of operation via Program ⇒ Pattern Run Control Parameters ⇒ Pattern Run ⇒ **Enable/Disable** (check box).
3. Configure the **Preset Speeds** that are to be used as the **Group Speed** set of frequencies via Program ⇒ Pattern Run Control Parameters ⇒ **Preset Speeds** (e.g., Preset Speed #1 on pg. 66).
4. Configure the **Group Speeds** by associating the **Preset Speeds** that are to be enabled and grouped (from step 3) as **Group Speed 1** (2, 3, or 4) via Program ⇒ Pattern Run Control Parameters ⇒ **Speeds**. Set the **Repeat** field to the number of times that the selected group is to be run. Set unused speed settings to **Skip**.
5. From the **Remote** mode (**Local|Remote** light is off), initiate a **Run** command (e.g., **F** and/or **R** terminal **On**).
6. Connect the input terminal that was configured in step 1 to **CC** and the **Pattern Run** will start and continue as programmed. Open the connection to stop the **Pattern Run** before its conclusion.

See **F018 on pg. 66** for further information on this parameter.

Pattern Run Mode Restart Command

Direct Access Number — F521

Parameter Type — **Selection List**

Factory Default — **Disabled**

Changeable During Run — **No**

Program ⇒ Pattern Run Control Parameters ⇒ **Pattern Run**

This parameter sets the start condition of subsequent **Pattern Runs** after the initial **Pattern Run** has been terminated or has completed its programming.

Settings:

Reset
Continue

Group #1 Speed Repeat Factor

Program ⇒ Pattern Run Control Parameters ⇒ **Speeds**

This parameter sets the number of times that the pattern defined in **Group #1** will be run.

Direct Access Number — F530
Parameter Type — **Numerical**
Factory Default — **1**
Changeable During Run — **No**
Minimum — 1
Maximum — Infinite

Group #1 Speed #1 (Pattern Run)

Program ⇒ Pattern Run Control Parameters ⇒ **Speeds**

Up to four groups of **Preset Speeds** may be setup and run from this screen. The **Preset Speed** numbers (1 – 15) may be entered into the **Speed #** field to be run for the number of times entered into the **Repeat** field (0 – 254) or forever by selecting **Infinite**. Running multiple **Preset Speeds** as a group is called a **Pattern Run**.

This parameter allows the user to run the **Preset Speeds** 1 – 15 as a group and is identified as **Group #1**.

Skip may be selected to ignore a **Preset Speed** entry.

See **F520** for further information on this setting.

Direct Access Number — F531
Parameter Type — **Selection List**
Factory Default — **1**
Changeable During Run — **No**

Group #1 Speed #2

Program ⇒ Pattern Run Control Parameters ⇒ **Speeds**

Same as **#1 Group Speed #1** (see **F531**).

Direct Access Number — F532
Parameter Type — **Selection List**
Factory Default — **2**
Changeable During Run — **No**

Group #1 Speed #3

Program ⇒ Pattern Run Control Parameters ⇒ **Speeds**

Same as **#1 Group Speed #1** (see **F531**).

Direct Access Number — F533
Parameter Type — **Selection List**
Factory Default — **3**
Changeable During Run — **No**

Group #1 Speed #4

Program ⇒ Pattern Run Control Parameters ⇒ **Speeds**

Same as **#1 Group Speed #1** (see **F531**).

Direct Access Number — F534
Parameter Type — **Selection List**
Factory Default — **4**
Changeable During Run — **No**

Group #1 Speed #5

Program ⇒ Pattern Run Control Parameters ⇒ **Speeds**

Same as **#1 Group Speed #1** (see **F531**).

Direct Access Number — F535
Parameter Type — **Selection List**
Factory Default — **5**
Changeable During Run — **No**

Group #1 Speed #6

Program ⇒ Pattern Run Control Parameters ⇒ **Speeds**

Same as **#1 Group Speed #1** (see **F531**).

Direct Access Number — F536
Parameter Type — **Selection List**
Factory Default — **6**
Changeable During Run — **No**

Group #1 Speed #7

Program ⇒ Pattern Run Control Parameters ⇒ **Speeds**

Same as **#1 Group Speed #1** (see **F531**).

Direct Access Number — F537
Parameter Type — **Selection List**
Factory Default — **7**
Changeable During Run — **No**

Group #1 Speed #8 Program ⇒ Pattern Run Control Parameters ⇒ **Speeds** Same as **#1 Group Speed #1** (see **F531**).	**Direct Access Number — F538** Parameter Type — **Selection List** Factory Default — **8** Changeable During Run — **No**
Group #2 Speed Repeat Factor Program ⇒ Pattern Run Control Parameters ⇒ **Speeds** This parameter sets the number of times that the enabled preset speeds of **Group #2** will be run; 0 – 254 or **Infinite**.	**Direct Access Number — F540** Parameter Type — **Selection List** Factory Default — **1** Changeable During Run — **No**
Group #2 Speed #1 Program ⇒ Pattern Run Control Parameters ⇒ **Speeds** Same as **#1 Group Speed #1** (see **F531**).	**Direct Access Number — F541** Parameter Type — **Selection List** Factory Default — **9** Changeable During Run — **No**
Group #2 Speed #2 Program ⇒ Pattern Run Control Parameters ⇒ **Speeds** Same as **#1 Group Speed #1** (see **F531**).	**Direct Access Number — F542** Parameter Type — **Selection List** Factory Default — **10** Changeable During Run — **No**
Group #2 Speed #3 Program ⇒ Pattern Run Control Parameters ⇒ **Speeds** Same as **#1 Group Speed #1** (see **F531**).	**Direct Access Number — F543** Parameter Type — **Selection List** Factory Default — **11** Changeable During Run — **No**
Group #2 Speed #4 Program ⇒ Pattern Run Control Parameters ⇒ **Speeds** Same as **#1 Group Speed #1** (see **F531**).	**Direct Access Number — F544** Parameter Type — **Selection List** Factory Default — **12** Changeable During Run — **No**
Group #2 Speed #5 Program ⇒ Pattern Run Control Parameters ⇒ **Speeds** Same as **#1 Group Speed #1** (see **F531**).	**Direct Access Number — F545** Parameter Type — **Selection List** Factory Default — **13** Changeable During Run — **No**
Group #2 Speed #6 Program ⇒ Pattern Run Control Parameters ⇒ **Speeds** Same as **#1 Group Speed #1** (see **F531**).	**Direct Access Number — F546** Parameter Type — **Selection List** Factory Default — **14** Changeable During Run — **No**
Group #2 Speed #7 Program ⇒ Pattern Run Control Parameters ⇒ **Speeds** Same as **#1 Group Speed #1** (see **F531**).	**Direct Access Number — F547** Parameter Type — **Selection List** Factory Default — **15** Changeable During Run — **No**
Group #2 Speed #8 Program ⇒ Pattern Run Control Parameters ⇒ **Speeds** Same as **#1 Group Speed #1** (see **F531**).	**Direct Access Number — F548** Parameter Type — **Selection List** Factory Default — **Skip** Changeable During Run — **No**

Group #3 Speed Repeat Factor Program ⇒ Pattern Run Control Parameters ⇒ **Speeds** This parameter sets the number of times that the enabled preset speeds of **Group #3** will be run; 0 – 254 or **Infinite**.	**Direct Access Number — F550** Parameter Type — **Selection List** Factory Default — **1** Changeable During Run — **No**
Group #3 Speed #1 Program ⇒ Pattern Run Control Parameters ⇒ **Speeds** Same as **#1 Group Speed #1** (see **F531**).	**Direct Access Number — F551** Parameter Type — **Selection List** Factory Default — **1** Changeable During Run — **No**
Group #3 Speed #2 Program ⇒ Pattern Run Control Parameters ⇒ **Speeds** Same as **#1 Group Speed #1** (see **F531**).	**Direct Access Number — F552** Parameter Type — **Selection List** Factory Default — **2** Changeable During Run — **No**
Group #3 Speed #3 Program ⇒ Pattern Run Control Parameters ⇒ **Speeds** Same as **#1 Group Speed #1** (see **F531**).	**Direct Access Number — F553** Parameter Type — **Selection List** Factory Default — **3** Changeable During Run — **No**
Group #3 Speed #4 Program ⇒ Pattern Run Control Parameters ⇒ **Speeds** Same as **#1 Group Speed #1** (see **F531**).	**Direct Access Number — F554** Parameter Type — **Selection List** Factory Default — **4** Changeable During Run — **No**
Group #3 Speed #5 Program ⇒ Pattern Run Control Parameters ⇒ **Speeds** Same as **#1 Group Speed #1** (see **F531**).	**Direct Access Number — F555** Parameter Type — **Selection List** Factory Default — **5** Changeable During Run — **No**
Group #3 Speed #6 Program ⇒ Pattern Run Control Parameters ⇒ **Speeds** Same as **#1 Group Speed #1** (see **F531**).	**Direct Access Number — F556** Parameter Type — **Selection List** Factory Default — **6** Changeable During Run — **No**
Group #3 Speed #7 Program ⇒ Pattern Run Control Parameters ⇒ **Speeds** Same as **#1 Group Speed #1** (see **F531**).	**Direct Access Number — F557** Parameter Type — **Selection List** Factory Default — **7** Changeable During Run — **No**
Group #3 Speed #8 Program ⇒ Pattern Run Control Parameters ⇒ **Speeds** Same as **#1 Group Speed #1** (see **F531**).	**Direct Access Number — F558** Parameter Type — **Selection List** Factory Default — **8** Changeable During Run — **No**
Group #4 Speed Repeat Factor Program ⇒ Pattern Run Control Parameters ⇒ **Speeds** This parameter sets the number of times that the enabled preset speeds of **Group #4** will be run; 1 – 254 or **Infinite**.	**Direct Access Number — F560** Parameter Type — **Selection List** Factory Default — **1** Changeable During Run — **No**

Group #4 Speed #1 Program ⇒ Pattern Run Control Parameters ⇒ **Speeds** Same as **#1 Group Speed #1** (see **F531**).	**Direct Access Number — F561** Parameter Type — **Selection List** Factory Default — **9** Changeable During Run — **No**
Group #4 Speed #2 Program ⇒ Pattern Run Control Parameters ⇒ **Speeds** Same as **#1 Group Speed #1** (see **F531**).	**Direct Access Number — F562** Parameter Type — **Selection List** Factory Default — **10** Changeable During Run — **No**
Group #4 Speed #3 Program ⇒ Pattern Run Control Parameters ⇒ **Speeds** Same as **#1 Group Speed #1** (see **F531**).	**Direct Access Number — F563** Parameter Type — **Selection List** Factory Default — **11** Changeable During Run — **No**
Group #4 Speed #4 Program ⇒ Pattern Run Control Parameters ⇒ **Speeds** Same as **#1 Group Speed #1** (see **F531**).	**Direct Access Number — F564** Parameter Type — **Selection List** Factory Default — **12** Changeable During Run — **No**
Group #4 Speed #5 Program ⇒ Pattern Run Control Parameters ⇒ **Speeds** Same as **#1 Group Speed #1** (see **F531**).	**Direct Access Number — F565** Parameter Type — **Selection List** Factory Default — **13** Changeable During Run — **No**
Group #4 Speed #6 Program ⇒ Pattern Run Control Parameters ⇒ **Speeds** Same as **#1 Group Speed #1** (see **F531**).	**Direct Access Number — F566** Parameter Type — **Selection List** Factory Default — **14** Changeable During Run — **No**
Group #4 Speed #7 Program ⇒ Pattern Run Control Parameters ⇒ **Speeds** Same as **#1 Group Speed #1** (see **F531**).	**Direct Access Number — F567** Parameter Type — **Selection List** Factory Default — **15** Changeable During Run — **No**
Group #4 Speed #8 Program ⇒ Pattern Run Control Parameters ⇒ **Speeds** Same as **#1 Group Speed #1** (see **F531**).	**Direct Access Number — F568** Parameter Type — **Selection List** Factory Default — **Skip** Changeable During Run — **No**
Pattern #1 Characteristics (Pattern Run) Program ⇒ Pattern Run Control Parameters ⇒ Preset Speeds ⇒ **1** In conjunction with the setting of **F585**, this parameter is used to set the run-time of **Preset Speed 1** when used as part of a **Pattern Run**. Settings: Time From Start Time From Reach No Limit Until Next Step	**Direct Access Number — F570** Parameter Type — **Selection List** Factory Default — **Time From Start** Changeable During Run — **No**

Pattern #2 Characteristics (Pattern Run) Program ⇒ Pattern Run Control Parameters ⇒ Preset Speeds ⇒ **2** Same as **#1 Pattern Characteristics** (see **F570**).	**Direct Access Number — F571** Parameter Type — **Selection List** Factory Default — **Time From Start** Changeable During Run — **No**
Pattern #3 Characteristics (Pattern Run) Program ⇒ Pattern Run Control Parameters ⇒ Preset Speeds ⇒ **3** Same as **#1 Pattern Characteristics** (see **F570**).	**Direct Access Number — F572** Parameter Type — **Selection List** Factory Default — **Time From Start** Changeable During Run — **No**
Pattern #4 Characteristics (Pattern Run) Program ⇒ Pattern Run Control Parameters ⇒ Preset Speeds ⇒ **4** Same as **#1 Pattern Characteristics** (see **F570**).	**Direct Access Number — F573** Parameter Type — **Selection List** Factory Default — **Time From Start** Changeable During Run — **No**
Pattern #5 Characteristics (Pattern Run) Program ⇒ Pattern Run Control Parameters ⇒ Preset Speeds ⇒ **5** Same as **#1 Pattern Characteristics** (see **F570**).	**Direct Access Number — F574** Parameter Type — **Selection List** Factory Default — **Time From Start** Changeable During Run — **No**
Pattern #6 Characteristics (Pattern Run) Program ⇒ Pattern Run Control Parameters ⇒ Preset Speeds ⇒ **6** Same as **#1 Pattern Characteristics** (see **F570**).	**Direct Access Number — F575** Parameter Type — **Selection List** Factory Default — **Time From Start** Changeable During Run — **No**
Pattern #7 Characteristics (Pattern Run) Program ⇒ Pattern Run Control Parameters ⇒ Preset Speeds ⇒ **7** Same as **#1 Pattern Characteristics** (see **F570**).	**Direct Access Number — F576** Parameter Type — **Selection List** Factory Default — **Time From Start** Changeable During Run — **No**
Pattern #8 Characteristics (Pattern Run) Program ⇒ Pattern Run Control Parameters ⇒ Preset Speeds ⇒ **8** Same as **#1 Pattern Characteristics** (see **F570**).	**Direct Access Number — F577** Parameter Type — **Selection List** Factory Default — **Time From Start** Changeable During Run — **No**
Pattern #9 Characteristics (Pattern Run) Program ⇒ Pattern Run Control Parameters ⇒ Preset Speeds ⇒ **9** Same as **#1 Pattern Characteristics** (see **F570**).	**Direct Access Number — F578** Parameter Type — **Selection List** Factory Default — **Time From Start** Changeable During Run — **No**
Pattern #10 Characteristics (Pattern Run) Program ⇒ Pattern Run Control Parameters ⇒ Preset Speeds ⇒ **10** Same as **#1 Pattern Characteristics** (see **F570**).	**Direct Access Number — F579** Parameter Type — **Selection List** Factory Default — **Time From Start** Changeable During Run — **No**
Pattern #11 Characteristics (Pattern Run) Program ⇒ Pattern Run Control Parameters ⇒ Preset Speeds ⇒ **11** Same as **#1 Pattern Characteristics** (see **F570**).	**Direct Access Number — F580** Parameter Type — **Selection List** Factory Default — **Time From Start** Changeable During Run — **No**

Pattern #12 Characteristics (Pattern Run)

Program ⇒ Pattern Run Control Parameters ⇒ Preset Speeds ⇒ **12**

Same as **#1 Pattern Characteristics** (see **F570**).

Direct Access Number — F581
Parameter Type — **Selection List**
Factory Default — **Time From Start**
Changeable During Run — **No**

Pattern #13 Characteristics (Pattern Run)

Program ⇒ Pattern Run Control Parameters ⇒ Preset Speeds ⇒ **13**

Same as **#1 Pattern Characteristics** (see **F570**).

Direct Access Number — F582
Parameter Type — **Selection List**
Factory Default — **Time From Start**
Changeable During Run — **No**

Pattern #14 Characteristics (Pattern Run)

Program ⇒ Pattern Run Control Parameters ⇒ Preset Speeds ⇒ **14**

Same as **#1 Pattern Characteristics** (see **F570**).

Direct Access Number — F583
Parameter Type — **Selection List**
Factory Default — **Time From Start**
Changeable During Run — **No**

Pattern #15 Characteristics (Pattern Run)

Program ⇒ Pattern Run Control Parameters ⇒ Preset Speeds ⇒ **15**

Same as **#1 Pattern Characteristics** (see **F570**).

Direct Access Number — F584
Parameter Type — **Selection List**
Factory Default — **Time From Start**
Changeable During Run — **No**

Pattern Run #1 Run-Time Setting

Program ⇒ Pattern Run Control Parameters ⇒ Preset Speeds ⇒ **1**

This parameter sets the run-time value for the **#1 Preset Speed** mode when used as part of a **Pattern Run**.

Direct Access Number — F585
Parameter Type — **Numerical**
Factory Default — **5**
Changeable During Run — **No**
Minimum — 1
Maximum — 8000
Units — Seconds

Pattern Run #2 Continuation Mode Run-Time Setting

Program ⇒ Pattern Run Control Parameters ⇒ Preset Speeds ⇒ **2**

This parameter sets the run-time value for the **#2 Preset Speed** mode when used as part of a **Pattern Run**.

Direct Access Number — F586
Parameter Type — **Numerical**
Factory Default — **5**
Changeable During Run — **No**
Minimum — 1
Maximum — 8000
Units — Seconds

Pattern Run #3 Run-Time Setting

Program ⇒ Pattern Run Control Parameters ⇒ Preset Speeds ⇒ **3**

This parameter sets the run-time value for the **#3 Preset Speed** mode when used as part of a **Pattern Run**.

Direct Access Number — F587
Parameter Type — **Numerical**
Factory Default — **5**
Changeable During Run — **No**
Minimum — 1
Maximum — 8000
Units — Seconds

Pattern Run #4 Run-Time Setting

Program ⇒ Pattern Run Control Parameters ⇒ Preset Speeds ⇒ **4**

This parameter sets the run-time value for the **#4 Preset Speed** mode when used as part of a **Pattern Run**.

Direct Access Number — F588
Parameter Type — **Numerical**
Factory Default — **5**
Changeable During Run — **No**
Minimum — 1
Maximum — 8000
Units — Seconds

Pattern Run #5 Run-Time Setting

Program ⇒ Pattern Run Control Parameters ⇒ Preset Speeds ⇒ **5**

This parameter sets the run-time value for the **#5 Preset Speed** mode when used as part of a **Pattern Run**.

Direct Access Number — F589
Parameter Type — **Numerical**
Factory Default — **5**
Changeable During Run — **No**
Minimum — 1
Maximum — 8000
Units — Seconds

Pattern Run #6 Run-Time Setting

Program ⇒ Pattern Run Control Parameters ⇒ Preset Speeds ⇒ **6**

This parameter sets the run-time value for the **#6 Preset Speed** mode when used as part of a **Pattern Run**.

Direct Access Number — F590
Parameter Type — **Numerical**
Factory Default — **5**
Changeable During Run — **No**
Minimum — 1
Maximum — 8000
Units — Seconds

Pattern Run #7 Run-Time Setting

Program ⇒ Pattern Run Control Parameters ⇒ Preset Speeds ⇒ **7**

This parameter sets the run-time value for the **#7 Preset Speed** mode when used as part of a **Pattern Run**.

Direct Access Number — F591
Parameter Type — **Numerical**
Factory Default — **5**
Changeable During Run — **No**
Minimum — 1
Maximum — 8000
Units — Seconds

Pattern Run #8 Run-Time Setting

Program ⇒ Pattern Run Control Parameters ⇒ Preset Speeds ⇒ **8**

This parameter sets the run-time value for the **#8 Preset Speed** mode when used as part of a **Pattern Run**.

Direct Access Number — F592
Parameter Type — **Numerical**
Factory Default — **5**
Changeable During Run — **No**
Minimum — 1
Maximum — 8000
Units — Seconds

Pattern Run #9 Run-Time Setting

Program ⇒ Pattern Run Control Parameters ⇒ Preset Speeds ⇒ **9**

This parameter sets the run-time value for the **#9 Preset Speed** mode when used as part of a **Pattern Run**.

Direct Access Number — F593
Parameter Type — **Numerical**
Factory Default — **5**
Changeable During Run — **No**
Minimum — 1
Maximum — 8000
Units — Seconds

Pattern Run #10 Run-Time Setting

Program ⇒ Pattern Run Control Parameters ⇒ Preset Speeds ⇒ **10**

This parameter sets the run-time value for the **#10 Preset Speed** mode when used as part of a **Pattern Run**.

Direct Access Number — F594
Parameter Type — **Numerical**
Factory Default — **5**
Changeable During Run — **No**
Minimum — 1
Maximum — 8000
Units — Seconds

Pattern Run #11 Run-Time Setting

Program ⇒ Pattern Run Control Parameters ⇒ Preset Speeds ⇒ **11**

This parameter sets the run-time value for the **#11 Preset Speed** mode when used as part of a **Pattern Run**.

Direct Access Number — F595
Parameter Type — **Numerical**
Factory Default — **5**
Changeable During Run — **No**
Minimum — 1
Maximum — 8000
Units — Seconds

Pattern Run #12 Run-Time Setting

Program ⇒ Pattern Run Control Parameters ⇒ Preset Speeds ⇒ **12**

This parameter sets the run-time value for the **#12 Preset Speed** mode when used as part of a **Pattern Run**.

Direct Access Number — F596
Parameter Type — **Numerical**
Factory Default — **5**
Changeable During Run — **No**
Minimum — 1
Maximum — 8000
Units — Seconds

Pattern Run #13 Run-Time Setting

Program ⇒ Pattern Run Control Parameters ⇒ Preset Speeds ⇒ **13**

This parameter sets the run-time value for the **#13 Preset Speed** mode when used as part of a **Pattern Run**.

Direct Access Number — F597
Parameter Type — **Numerical**
Factory Default — **5**
Changeable During Run — **No**
Minimum — 1
Maximum — 8000
Units — Seconds

Pattern Run #14 Run-Time Setting

Program ⇒ Pattern Run Control Parameters ⇒ Preset Speeds ⇒ **14**

This parameter sets the run-time value for the **#14 Preset Speed** mode when used as part of a **Pattern Run**.

Direct Access Number — F598
Parameter Type — **Numerical**
Factory Default — **5**
Changeable During Run — **No**
Minimum — 1
Maximum — 8000
Units — Seconds

Pattern Run #15 Run-Time Setting

Program ⇒ Pattern Run Control Parameters ⇒ Preset Speeds ⇒ **15**

This parameter sets the run-time value for the **#15 Preset Speed** mode when used as part of a **Pattern Run**.

Direct Access Number — F599
Parameter Type — **Numerical**
Factory Default — **5**
Changeable During Run — **No**
Minimum — 1
Maximum — 8000
Units — Seconds

Electronic Thermal Protection #1

Program ⇒ Motor Parameters ⇒ **Motor Set #1**

The **Motor #1 Electronic Thermal Protection** parameter specifies the motor overload current level for motor set #1. This value is entered as either a percentage of the full load rating of the ASD or as the FLA of the motor.

The unit of measurement for this parameter may be set to **Amps** or it may be set as a percentage of the ASD rating. The name-plated FLA of the motor may be entered directly when **Amps** is selected as the unit of measurement (see **F701** to change the display unit).

Electronic Thermal Protection settings (#1 – #4) will be displayed in **Amps** if the **EOI** display units are set to **V/A** rather than **%**.

Direct Access Number — F600

Parameter Type — **Numerical**

Factory Default — **100.0**

Changeable During Run — **Yes**

Minimum — 10.0

Maximum — 100.0

Units — %

Overcurrent Stall Level

Program ⇒ Protection Parameters ⇒ **Stall**

This parameter specifies the output current level at which the output frequency is reduced in an attempt to prevent a trip. The overcurrent level is entered as a percentage of the maximum rating of the drive.

Note: *Parameter F017 (Soft Stall) must be enabled to use this feature.*

Direct Access Number — F601

Parameter Type — **Numerical**

Factory Default — **(ASD-dependent)**

Changeable During Run — **Yes**

Minimum — 0.00

Maximum — 200.0

Units — %

Trip Save at Power Down Enable

Program ⇒ Protection Parameters ⇒ **Trip Settings**

This parameter **Enables/Disables** the **Trip Save at Power Down** setting. When enabled, this feature logs the trip event and retains the trip information when the system powers down. The trip information may be viewed from the **Monitor** screen.

When disabled, the trip information will be cleared when the system powers down.

Settings:

Disabled
Enabled (box checked)

Direct Access Number — F602

Parameter Type — **Check Box**

Factory Default — **Disabled**

Changeable During Run — **No**

Emergency Off Mode Settings

Program ⇒ Protection Parameters ⇒ **Emergency Off Settings**

This parameter determines the method used to stop the motor in the event that an **Emergency Off** command is received and the system is configured to use this feature.

This setting may also be associated with the **FL** terminals to allow the **FL** relay to change states when an **EOFF** condition occurs by setting the **FL** terminal to **Fault FL (all)** (see **F132**).

Note: *A supplemental emergency stopping system should be used with the ASD. Emergency stopping should not be a task of the ASD alone.*

Settings:

Coast Stop
Deceleration Stop
DC Injection Braking Stop

Direct Access Number — F603

Parameter Type — **Selection List**

Factory Default — **Coast Stop**

Changeable During Run — **No**

Emergency Off DC Injection Application Time

Program ⇒ Protection Parameters ⇒ **Emergency Off Settings**

When **DC Injection** is used as a function of receiving an **Emergency Off** command (**F603**), this parameter determines the time that the **DC Injection** braking is applied to the motor.

Direct Access Number — F604
Parameter Type — **Numerical**
Factory Default — **0.10**
Changeable During Run — **Yes**
Minimum — 0.00
Maximum — 10.00
Units — Seconds

Output Phase Loss Detection

Program ⇒ Protection Parameters ⇒ **Phase Loss**

This parameter **Enables/Disables** the monitoring of each phase of the 3-phase output signal (U, V, or W) of the ASD. If either line is missing, inactive, or not of the specified level, the ASD incurs a trip.

Settings:

Disabled
Enabled (box checked)

Direct Access Number — F605
Parameter Type — **Check Box**
Factory Default — **Disabled**
Changeable During Run — **No**

OL Reduction Starting Frequency

Program ⇒ Protection Parameters ⇒ **Overload**

This parameter is used to reduce the start frequency during very low-speed motor operation. During very low-speed operation the cooling efficiency of the motor decreases. Lowering the start frequency aides in minimizing the generated heat.

Direct Access Number — F606
Parameter Type — **Numerical**
Factory Default — **6.00**
Changeable During Run — **Yes**
Minimum — 0.00
Maximum — 30.00
Units — Hz

Motor 150% OL Time Limit

Program ⇒ Protection Parameters ⇒ **Overload**

This parameter establishes a time that the motor may operate at 150% of its rated current before tripping. This setting applies the time/150% reference to the individual settings of each motor (e.g., this setting references 150% of the **F600** setting for the #1 motor).

The unit will trip sooner than the time entered here if the overload is greater than 150%.

Direct Access Number — F607
Parameter Type — **Numerical**
Factory Default — **600**
Changeable During Run — **Yes**
Minimum — 10
Maximum — 2400
Units — Seconds

Inrush Current Suppression

Program ⇒ Protection Parameters ⇒ **Soft Start**

The startup inrush current may be suppressed for up to 2.5 seconds. This parameter determines the length of the inrush current suppression.

Direct Access Number — F608
Parameter Type — **Numerical**
Factory Default — **0.30**
Changeable During Run — **No**
Minimum — 0.30
Maximum — 2.50
Units — Seconds

Interlock with ST

Program ⇒ Protection Parameters ⇒ **Soft Start**

This parameter **Enables/Disables** the **ST**-to-**CC** connection dependency on the successful completion of a **Soft Start**. If enabled, the **ST**-to-**CC** connection will happen only after a successful **Soft Start**.

Direct Access Number — F609
Parameter Type — **Check Box**
Factory Default — **Disabled**
Changeable During Run — **No**

Low Current Trip

Program ⇒ Protection Parameters ⇒ **Low Current Settings**

This parameter **Enables/Disables** the low-current trip feature.

When enabled, the drive will trip on a low-current fault if the output current of the drive falls below the level defined at **F611** and remains there for the time set at **F612**.

Settings:

Disabled
Enabled (box checked)

Direct Access Number — F610
Parameter Type — **Check Box**
Factory Default — **Disabled**
Changeable During Run — **No**

Low Current Trip Threshold

Program ⇒ Protection Parameters ⇒ **Low Current Settings**

When the low-current monitor is enabled, this function sets the low-current trip threshold. The threshold value is entered as a percentage of the maximum rating of the drive.

Direct Access Number — F611
Parameter Type — **Numerical**
Factory Default — **0.00**
Changeable During Run — **Yes**
Minimum — 0.00
Maximum — 100.0
Units — %

Low Current Trip Threshold Time

Program ⇒ Protection Parameters ⇒ **Low Current Settings**

When the low-current monitor is enabled, this function sets the time that the low-current condition must exist to cause a trip.

Direct Access Number — F612
Parameter Type — **Numerical**
Factory Default — **0**
Changeable During Run — **Yes**
Minimum — 0
Maximum — 255
Units — Seconds

Short Circuit Test

Program ⇒ Protection Parameters ⇒ **Arm Short Check Settings**

This parameter determines when the system will perform an **Output Short Circuit** test.

Settings:

Every Run
Every Powerup

Direct Access Number — F613
Parameter Type — **Selection List**
Factory Default — **Every Run**
Changeable During Run — **No**

Short Circuit Test Duration

Program ⇒ Protection Parameters ⇒ **Arm Short Check Settings**

This parameter sets the pulse width of the ASD output pulse that is applied to the motor during an **Output Short Circuit** test.

Direct Access Number — F614
Parameter Type — **Numerical**
Factory Default — **(ASD-dependent)**
Changeable During Run — **No**
Minimum — 1
Maximum — 100
Units — µS

Overtorque Trip

Program ⇒ Protection Parameters ⇒ **Overtorque Parameters**

This parameter **Enables/Disables** the **Over Torque Tripping** function.

When enabled, the ASD trips if an output torque value greater than the setting of **F616** or **F617** exists for a time longer than the setting of **F618**.

When disabled, the ASD does not trip due to overtorque conditions.

Settings:

Disabled
Enabled (box checked)

Direct Access Number — F615

Parameter Type — **Check Box**

Factory Default — **Disabled**

Changeable During Run — **No**

Overtorque Trip/Alarm Level (Positive Torque)

Program ⇒ Protection Parameters ⇒ **Overtorque Parameters**

This parameter sets the torque threshold level that is used as a setpoint for overtorque tripping. This setting is a percentage of the maximum rated torque of the drive.

Direct Access Number — F616

Parameter Type — **Numerical**

Factory Default — **150.0**

Changeable During Run — **No**

Minimum — 0.00

Maximum — 250.0

Units — %

Overtorque Trip/Alarm Level (Negative Torque)

Program ⇒ Protection Parameters ⇒ **Overtorque Parameters**

This parameter sets the torque threshold level that is used as a setpoint for overtorque tripping during regeneration. This setting is a percentage of the maximum rated torque of the drive.

Direct Access Number — F617

Parameter Type — **Numerical**

Factory Default — **150.0**

Changeable During Run — **No**

Minimum — 0.00

Maximum — 250.0

Units — %

Overtorque Detection Time

Program ⇒ Protection Parameters ⇒ **Overtorque Parameters**

This parameter sets the amount of time that the overtorque condition may exceed the tripping threshold level set at **F616** and **F617** before a trip occurs.

Direct Access Number — F618

Parameter Type — **Numerical**

Factory Default — **0.50**

Changeable During Run — **No**

Minimum — 0.00

Maximum — 100.0

Units — Seconds

Cooling Fan Control

Program ⇒ Protection Parameters ⇒ **Cooling Fan Settings**

This parameter sets the cooling fan run-time command.

Settings:

Automatic
Always On

Direct Access Number — F620

Parameter Type — **Selection List**

Factory Default — **Automatic**

Changeable During Run — **Yes**

Cumulative Run Timer Alarm Setting

Program ⇒ Protection Parameters ⇒ **Cumulative Run Timer**

This parameter sets a run-time value that, once exceeded, closes a contact. The output signal may be used to control external equipment or used to engage a brake.

Note: *The time displayed is 1/10th of the actual time (0.1 hr. = 1.0 hr.).*

Direct Access Number — F621
Parameter Type — **Numerical**
Factory Default — **175.0**
Changeable During Run — **Yes**
Minimum — 0.1
Maximum — 999.9
Units — Hours (X 100)

Abnormal Speed Detection Filter Time

Program ⇒ Protection Parameters ⇒ **Abnormal Speed Settings**

This parameter sets the time that an overspeed condition must exist to cause a trip.

Direct Access Number — F622
Parameter Type — **Numerical**
Factory Default — **10.0**
Changeable During Run — **No**
Minimum — 0.01
Maximum — 100.0
Units — Seconds

Overspeed Detection Frequency Range

Program ⇒ Protection Parameters ⇒ **Abnormal Speed Settings**

This parameter sets the upper level of the **Base Frequency** range that, once exceeded, will cause an **Overspeed Detected** alert.

Direct Access Number — F623
Parameter Type — **Numerical**
Factory Default — **0.0**
Changeable During Run — **Yes**
Minimum — 0.0
Maximum — 30.0
Units — Hz

Speed Drop Detection Frequency Range

Program ⇒ Protection Parameters ⇒ **Abnormal Speed Settings**

This parameter sets the lower level of the **Base Frequency** range that, once exceeded, will cause a **Speed Drop Detected** alert.

Direct Access Number — F624
Parameter Type — **Numerical**
Factory Default — **0.00**
Changeable During Run — **Yes**
Minimum — 0.00
Maximum — 30.00
Units — Hz

Overvoltage Stall Level (fast)

Program ⇒ Protection Parameters ⇒ **Stall**

This parameter sets the upper DC bus voltage threshold that, once exceeded, will cause an **Overvoltage Stall**. An **Overvoltage Stall** increases the output frequency of the drive during deceleration for a specified time in an attempt to prevent an **Overvoltage Trip**.

If the overvoltage condition persists for over 250 µS, an **Overvoltage Trip** will be incurred.

Note: *This feature may increase deceleration times.*

Direct Access Number — F625
Parameter Type — **Numerical**
Factory Default — **(ASD-dependent)**
Changeable During Run — **Yes**
Minimum — 50.00
Maximum — 250.0
Units — %

Overvoltage Stall Level

Program ⇒ Protection Parameters ⇒ **Stall**

This parameter sets the upper DC bus voltage threshold that, once exceeded, will cause an **Overvoltage Stall**. An **Overvoltage Stall** increases the output frequency of the drive during deceleration for a specified time in an attempt to prevent an **Overvoltage Trip**.

If the overvoltage condition persists for over 4 mS, an **Overvoltage Trip** will be incurred.

Note: *This feature may increase deceleration times.*

Direct Access Number — F626

Parameter Type — **Numerical**

Factory Default — **(ASD-dependent)**

Changeable During Run — **Yes**

Minimum — 50.0

Maximum — 250.0

Units — %

Undervoltage Trip

Program ⇒ Protection Parameters ⇒ **Undervoltage/Ridethrough**

This parameter **Enables/Disables** the **Undervoltage Trip** function.

With this parameter **Enabled**, the ASD will trip if the undervoltage condition persists for a time greater than the **F628** setting.

A user-selected contact may be actuated if so configured.

If **Disabled** the ASD will stop and not trip; the **FL** contact is not active.

Settings:

Disabled
Enabled (box checked)

Direct Access Number — F627

Parameter Type — **Check Box**

Factory Default — **Disabled**

Changeable During Run — **No**

Undervoltage Detection Time

Program ⇒ Protection Parameters ⇒ **Undervoltage/Ridethrough**

This parameter sets the time that the undervoltage condition must exist to cause an **Undervoltage** trip when this function is enabled at **F627**.

Direct Access Number — F628

Parameter Type — **Numerical**

Factory Default — **0.03**

Changeable During Run — **No**

Minimum — 0.00

Maximum — 10.00

Units — Seconds

Undervoltage Stall level

Program ⇒ Protection Parameters ⇒ **Undervoltage/Ridethrough**

This parameter sets the low end of the DC bus voltage threshold that, once it drops below this setting, will activate the setting of **F302** (**Ridethrough Mode**). Activation may be the result of a momentary power loss or an excessive load on the bus voltage. Once activated, the system will attempt to maintain the bus voltage level set here until the motor stops.

Note: *This feature may decrease deceleration times.*

Direct Access Number — F629

Parameter Type — **Numerical**

Factory Default — **(ASD-dependent)**

Changeable During Run — **Yes**

Minimum — 50.00

Maximum — 100.0

Units — %

Brake Trouble Internal Timer

Program ⇒ Protection Parameters ⇒ **Brake Fault Timer**

This parameter is used in conjunction with the discrete input terminal setting **64** [**System Consistent Sequence** (BA: braking answer)] (see item **64** of Table 8 on pg. 76 for further information on this feature).

After activating the discrete input terminal **System Consistent Sequence** (B: braking release), the setting of this parameter defines a window of time in which 1) a **Braking Answer** response must be received or 2) the brake must release.

Should this timer setting expire before the **Braking Answer** is returned or the brake releases, a **Brake Fault** is incurred. Otherwise, the brake releases and normal motor operations resume.

Direct Access Number — F630

Parameter Type — **Numerical**

Factory Default — **0.00**

Changeable During Run — **Yes**

Minimum — 0.00

Maximum — 10.00

Units — Seconds

Position Difference Limit

Program ⇒ Feedback Parameters ⇒ Feedback Settings ⇒ **Position Difference Limit**

While operating in the **Position Control** mode, this parameter sets the maximum allowed difference between the commanded position and resulting position as indicated by encoder pulses.

Direct Access Number — F631
Parameter Type — **Numerical**
Factory Default — **16.0**
Changeable During Run — **No**
Minimum — 0.1
Maximum — 6553

Release After Run Timer

Program ⇒ Protection Parameters ⇒ **Brake Fault Timer**

This parameter sets the time that the brake will hold after the **Run** command criteria has been met.

Direct Access Number — F632
Parameter Type — **Numerical**
Factory Default — **0.00**
Changeable During Run — **No**
Minimum — 0.00
Maximum — 2.50
Units — Seconds

Earth Fault Alarm Level

Program ⇒ Protection ⇒ **Earth Fault Alarm Level**

This parameter sets the threshold level (%) that must be exceeded to meet the **Earth Fault Alarm** activation criteria.

Direct Access Number — F640
Parameter Type — **Numerical**
Factory Default — **100**
Changeable During Run — **Yes**
Minimum — 0
Maximum — 100
Units — %

Earth Fault Alarm Time

Program ⇒ Protection ⇒ **Earth Fault Alarm Time**

In the event that the **Earth Fault Alarm** activation criteria is met, a timer begins to count down to zero. Upon reaching zero, the **Earth Fault Alarm** is activated.

This parameter sets the start-time of the count-down timer.

Direct Access Number — F641
Parameter Type — **Numerical**
Factory Default — **1.00**
Changeable During Run — **Yes**
Minimum — 0.00
Maximum — 2.50
Units — Seconds

Earth Fault Trip Level

Program ⇒ Protection ⇒ **Earth Fault Trip Level**

This parameter sets the threshold level (%) that must be exceeded to meet the **Earth Fault Trip** activation criteria.

Direct Access Number — F642
Parameter Type — **Numerical**
Factory Default — **100**
Changeable During Run — **Yes**
Minimum — 0.00
Maximum — 100
Units — %

Earth Fault Trip Time

Program ⇒ Protection ⇒ **Earth Fault Trip Time**

In the event that the **Earth Fault Trip** activation criteria is met, a timer begins to count down to zero. Upon reaching zero, the **Earth Fault Trip** is activated.

This parameter sets the start-time of the count-down timer.

Direct Access Number — F643
Parameter Type — **Numerical**
Factory Default — **1.00**
Changeable During Run — **Yes**
Minimum — 0.00
Maximum — 2.50
Units — Seconds

Acc/Dec Base Frequency Adjustment

Program ⇒ Terminal Selection Parameters ⇒ **Analog Input Functions**

Direct Access Number — F650

Parameter Type — **Selection List**

Factory Default — **Disabled**

Changeable During Run — **Yes**

This parameter **Enables/Disables** the feature that allows for the external adjustment of the **Base Frequency**. When enabled, either **VI/II** or **RR** may be used as an input source for the modification of the **Base Frequency** setting.

Settings:

Disabled
VI/II
RR

Upper Limit Frequency Adjustment

Program ⇒ Terminal Selection Parameters ⇒ **Analog Input Functions**

Direct Access Number — F651

Parameter Type — **Selection List**

Factory Default — **Disabled**

Changeable During Run — **Yes**

This parameter **Enables/Disables** the feature that allows for the external adjustment of the **Upper Limit**. When enabled, either **VI/II** or **RR** may be used as an input source for the modification of the **Upper Limit** setting.

Settings:

Disabled
VI/II
RR

Acceleration Time Adjustment

Program ⇒ Terminal Selection Parameters ⇒ **Analog Input Functions**

Direct Access Number — F652

Parameter Type — **Selection List**

Factory Default — **Disabled**

Changeable During Run — **Yes**

This parameter **Enables/Disables** the feature that allows for the external adjustment of the **Acceleration Time**. Selecting either **VI/II** or **RR** enables this feature. The selected input is used as a multiplier of the programmed **Acceleration Time** setting. The multiplication factor may be from 1 to 10.

Note: *An acceleration time shorter than the load will allow may cause nuisance tripping and mechanical stress to loads.*

Settings:

Disabled
VI/II
RR

Deceleration Time Adjustment

Program ⇒ Terminal Selection Parameters ⇒ **Analog Input Functions**

Direct Access Number — F653

Parameter Type — **Selection List**

Factory Default — **Disabled**

Changeable During Run — **Yes**

This parameter **Enables/Disables** the feature that allows for the external adjustment of the **Deceleration Time**. Selecting either **VI/II** or **RR** enables this feature. The selected input is used as a modifier of the programmed **Deceleration Time** setting.

Note: *A deceleration time shorter than the load will allow may cause nuisance tripping and mechanical stress to loads.*

Settings:

Disabled
VI/II
RR

Torque Boost Adjustment

Program ⇒ Terminal Selection Parameters ⇒ **Analog Input Functions**

Direct Access Number — F654

Parameter Type — **Selection List**

Factory Default — **Disabled**

Changeable During Run — **Yes**

This parameter **Enables/Disables** the feature that allows for the external adjustment of the **Torque Boost** setting. Selecting either **VI/II** or **RR** enables this feature. The selected input is used as a modifier of the programmed **Torque Boost** setting.

Settings:

Disabled
VI/II
RR

Frequency Override Additive Input

Program ⇒ Feedback Parameters ⇒ **Override Control**

Direct Access Number — F660

Parameter Type — **Selection List**

Factory Default — **Disabled**

Changeable During Run — **No**

This parameter **Enables/Disables** the feature that allows for the external adjustment of the **Output Frequency**.

Selecting either of the input methods listed enables this feature. The selected input is used as a modifier of the programmed **Output Frequency**.

Settings:

Disabled
VI/II
RR
RX
RX2 (option)
LED Keypad (option)
Binary/BCD Input
Common Serial (TTL)
RS232/RS485
Communication Card
Motorized Pot
Pulse Input 1

Frequency Override Multiplying Input

Program ⇒ Feedback Parameters ⇒ **Override Control**

Direct Access Number — F661

Parameter Type — **Selection List**

Factory Default — **Disabled**

Changeable During Run — **No**

This parameter **Enables/Disables** the feature that allows for the external adjustment of the **Output Frequency**.

Selecting either of the input methods listed enables this feature. The selected input is used as a multiplier of the programmed **Output Frequency**.

If operating using the **LED Keypad Option** and **Setting** is selected, the value entered at **F729** is used as the multiplier.

Settings:

Disabled
VI/II
RR
RX
RX2 (option)
Setting (LED Keypad Option Only)

AM Terminal Assignment

Program ⇒ Meter Terminal Adjustment Parameters ⇒ **AM**

This setting determines the output function of the **AM** analog output terminal. This output terminal produces an output current that is proportional to the magnitude of the function assigned to this terminal. The available assignments for this output terminal are listed in Table 7 on pg. 61.

Note: *To read **voltage** at this terminal a 100 – 500Ω resistor is required and must be connected from AM (+) to AM (-). The voltage is read across the 100 – 500Ω resistor.*

Current may be read by connecting an ammeter from AM (+) to AM (-).

The **AM** analog output has a maximum resolution of 1/1024. The **AM Terminal Adjustment** (**F671**) must be used to calibrate the output signal for a proper response. **SW-1** may be switched to allow for the full-range output to be either 0 – 1 mA or 4 – 20 mA when providing an output current, or either 0 – 1 or 1 to 7.5 volts when providing an output voltage at this terminal.

Direct Access Number — F670

Parameter Type — **Selection List**

Factory Default — **Output Current**

Changeable During Run — **Yes**

AM Terminal Adjustment

Program ⇒ Meter Terminal Adjustment Parameters ⇒ **AM**

This function is used to calibrate the **AM** analog output terminal.

To calibrate the **AM** analog output, connect a meter (current or voltage) as described at **F670**. With the drive running at a known frequency, adjust this parameter (**F671**) until the running frequency produces the desired DC level output at the **AM** terminal.

Direct Access Number — F671

Parameter Type — **Numerical**

Factory Default — **512**

Changeable During Run — **Yes**

Minimum — 1

Maximum — 1280

Analog 1 Terminal Setting

Program ⇒ Meter Terminal Adjustment Parameters ⇒ **Analog 1**

This parameter sets the **Analog 1** multifunction programmable terminal to 1 of 31 possible functions and is available on the **ASD Multicom** option board only.

Possible assignments for this output terminal are listed in Table 7 on pg. 61.

Direct Access Number — F672

Parameter Type — **Selection List**

Factory Default — **Output Voltage**

Changeable During Run — **Yes**

Analog 1 Terminal Adjustment

Program ⇒ Meter Terminal Adjustment Parameters ⇒ **Analog 1**

This parameter adjusts the coefficient of the **Analog 1** circuit to obtain an output that corresponds with a known input.

This function is used in the calibration of external signal measuring devices (DVM, counters, etc.).

Direct Access Number — F673

Parameter Type — **Numerical**

Factory Default — **512**

Changeable During Run — **Yes**

Minimum — 1

Maximum — 1280

Analog 2 Terminal Setting

Program ⇒ Meter Terminal Adjustment Parameters ⇒ **Analog 2**

This parameter sets the **Analog 2** multifunction programmable terminal to 1 of 31 possible functions and is available on the **ASD Multicom** option board only.

Possible assignments for this output terminal are listed in Table 7 on pg. 61.

Direct Access Number — F674

Parameter Type — **Selection List**

Factory Default — **Post-compensation Frequency**

Changeable During Run — **Yes**

Analog 2 Terminal Adjustment

Program ⇒ Meter Terminal Adjustment Parameters ⇒ **Analog 2**

This parameter adjusts the coefficient of the circuit to obtain an output that corresponds with a known input.

This function is used in the calibration of external signal measuring devices (DVM, counters, etc.).

Direct Access Number — F675
Parameter Type — **Numerical**
Factory Default — **512**
Changeable During Run — **Yes**
Minimum — 1
Maximum — 1280

FP Terminal Setting

Program ⇒ Terminal Selection Parameters ⇒ **FP**

This parameter commands the multifunction programmable **FP** terminal to monitor the value of 1 of 31 possible system functions. As the monitored function changes in magnitude or frequency, the pulse count of the **FP** output pulse train changes in direct proportion to changes in the monitored function. As the monitored value goes up so does the pulse count of the **FP** output.

Note: *The duty cycle of the output pulse train remains at 65 ±5.0 µS.*

Possible assignments for this output terminal are listed in Table 7 on pg. 61.

Direct Access Number — F676
Parameter Type — **Selection List**
Factory Default — **Output Frequency**
Changeable During Run — **Yes**

FP Terminal Adjustment

Program ⇒ Terminal Selection Parameters ⇒ **FP**

This parameter sets the full-scale reading of the **FP Terminal**. The full-scale reading of the monitored variable selected in **F676** may be set here.

Direct Access Number — F677
Parameter Type — **Numerical**
Factory Default — **3.840**
Changeable During Run — **Yes**
Minimum — 1.000
Maximum — 43.200
Units — kHz

Display Units for Voltage and Current

Program ⇒ Utility Parameters ⇒ **Display Units**

This parameter sets the unit of measurement for current and voltage values displayed on the EOI.

Settings:

%
V/A

Direct Access Number — F701
Parameter Type — **Selection List**
Factory Default — **%**
Changeable During Run — **Yes**

Hz Per User-defined Unit

Program ⇒ Utility Parameters ⇒ **Display Units**

This parameter allows the user to input a quantity to be displayed on the EOI that is proportional to the output frequency of the drive.

This feature is useful when the output of a process is moved along at a rate that is proportional to the output frequency of the drive.

Direct Access Number — F702
Parameter Type — **Numerical**
Factory Default — **0.00**
Changeable During Run — **Yes**
Minimum — 0.00
Maximum — 200.0
Units — Hz/UDU

Frequency Display Resolution

Program ⇒ Utility Parameters ⇒ **Display Units**

The parameter sets the number of decimal places to be displayed during non-**Accel/Decel** functions.

Direct Access Number — F703
Parameter Type — **Numerical**
Factory Default — **0.1**
Changeable During Run — **Yes**
Minimum — 1
Maximum — 0.01

Accel/Decel Special Display Resolution

Program ⇒ Special Control Parameters ⇒ **Accel/Decel Special**

This parameter sets the number of decimal places to be displayed for **Accel/ Decel** functions.

Direct Access Number — F704

Parameter Type — **Numerical**

Factory Default — **0.1**

Changeable During Run — **Yes**

Minimum — 1

Maximum — 0.01

Prohibit Initializing User Parameters During Typeform Initialization

Program ⇒ Special Control Parameters ⇒ Special Parameters⇒ **Prohibit Initializing User Parameters During Typeform Initialization**

This parameter **Enables/Disables** the ability to initialize user parameters during a **Type Form** initialization.

Settings:

Allowed
Prohibited

Direct Access Number — F709

Parameter Type — **Selection List**

Factory Default — **Allowed**

Changeable During Run — **Yes**

V/f Group

No path available (Direct Access Only)

While operating using the **LED Keypad Option** 1 of 4 **V/f** groups may be selected and run. Each **V/f** group is comprised of 4 user-defined variables: **Base Frequency**, **Base Frequency Voltage**, **Manual Torque Boost**, and **Electronic Thermal Protection**. Expanded descriptions of these parameters may be found in this section (Direct Access Parameter Information).

Settings:

Group 1
Group 2
Group 3
Group 4

Note: *If using the **LCD EOI,** press **ESC** from the **Frequency Command** screen to access this parameter.*

Direct Access Number — F720

Parameter Type — **Selection List**

Factory Default — **1**

Changeable During Run — **Yes**

Stop Pattern

No path available (Direct Access Only)

While operating using the **LED Keypad Option** the **Stop Pattern** parameter determines the method used to stop the motor when the stop command is issued via a **Stop** command from the **LED Keypad**.

The **Decel Stop** setting enables the **Dynamic Braking** system that is setup at **F304** or the **DC Injection Braking** system that is setup at **F250**, **F251**, and **F252**.

The **Coast Stop** setting allows the motor to stop at the rate allowed by the inertia of the load.

Settings:

Decel Stop
Coast Stop

Note: *The **Stop Pattern** setting has no effect on the **Emergency Off** settings of F603. If using the **LCD EOI,** press **ESC** from the **Frequency Command** screen to access this parameter.*

Direct Access Number — F721

Parameter Type — **Selection List**

Factory Default — **Decel Stop**

Changeable During Run — **Yes**

Torque Limit Group

Direct Access Number — F723

Parameter Type — **Selection List**

Factory Default — **1**

Changeable During Run — **Yes**

No path available (Direct Access Only)

While operating using the **LED Keypad Option** this parameter is used to select 1 of 4 preset positive torque limits to apply to the active motor. The settings of profiles 1 – 4 may be setup at **F441**, **F444**, **F446**, and **F448**, respectively.

Settings:

1
2
3
4

Note: *If using the **LCD EOI,** press **ESC** from the **Frequency Command** screen to access this parameter.*

Feedback in Panel Mode

Direct Access Number — F724

Parameter Type — **Selection List**

Factory Default — **Enabled**

Changeable During Run — **Yes**

No path available (Direct Access Only)

While operating using the **LED Keypad Option** this parameter **Enables/ Disables PID** feedback control.

Settings:

Enabled
Disabled

Note: *If using the **LCD EOI,** press **ESC** from the **Frequency Command** screen to access this parameter.*

LED Option Override Multiplication Gain

Direct Access Number — F729

Parameter Type — **Numerical**

Factory Default — **0.00**

Changeable During Run — **Yes**

Minimum — -100.00

Maximum — 100.00

Program ⇒ Feedback Parameters ⇒ **Override Control**

If operating using the **LED Keypad Option** this parameter provides a value to be used in the event that **Setting** is selected for the **Frequency Override Multiplying Input** (**F661**).

LOD Control and Stopping Method

Direct Access Number — F731

Parameter Type — **Selection List**

Factory Default — **Disabled**

Changeable During Run — **Yes**

Program ⇒ Special Control Parameters ⇒ Low Output Disable Function ⇒ **LOD**

Enables/Disables the **Low Output Disable** function and, if enabled, selects a stopping method.

Settings:

Disabled
Enabled — Decel Stop
Enabled — Coast Stop

LOD Start Level (Hz)

Direct Access Number — F732

Parameter Type — **Numerical**

Factory Default — **0.0**

Changeable During Run — **Yes**

Minimum — 0.0

Maximum — **Max. Freq.**

Units — Hz

Program ⇒ Special Control Parameters ⇒ Low Output Disable Function ⇒ **LOD Start Level (Hz)**

The **Low Output Disable Start Level** sets the output frequency threshold that, if exceeded, will initiate the **LOD** function if properly configured.

LOD Start Time

Program ⇒ Special Control Parameters ⇒ Low Output Disable Function ⇒ **LOD Start Time**

The **Low Output Disable Start Time** sets the amount of time that the **LOD Start Level** criteria must be met and maintained for the **LOD** function to be initiated.

Direct Access Number — F733
Parameter Type — **Numerical**
Factory Default — **0.0**
Changeable During Run — **Yes**
Minimum — 0.0
Maximum — 3600.0
Units — Seconds

LOD Setpoint Boost (Hz)

Program ⇒ Special Control Parameters ⇒ Low Output Disable Function ⇒ **LOD Setpoint Boost (Hz)**

The **Low Output Disable** feature adds the user-input frequency value to the commanded frequency.

Direct Access Number — F734
Parameter Type — **Numerical**
Factory Default — **0.0**
Changeable During Run — **Yes**
Minimum — 0.0
Maximum — **Max. Freq.**
Units — Hz

LOD Boost Time

Program ⇒ Special Control Parameters ⇒ Low Output Disable Function ⇒ **LOD Boost Time**

The **Low Output Disable Boost Time** sets the on-time timer for the **LOD Boost** function.

Once expired, the **LOD Boost** function ceases.

Direct Access Number — F735
Parameter Type — **Numerical**
Factory Default — **0.0**
Changeable During Run — **Yes**
Minimum — 0.0
Maximum — 3600.0
Units — Seconds

LOD Feedback Level (Hz)

Program ⇒ Special Control Parameters ⇒ Low Output Disable Function ⇒ **LOD Feedback Level (Hz)**

The **Low Output Disable Feedback Level** sets a frequency level that, until the output of the ASD drops below this setting, the **Restart Delay Timer** does not start.

Direct Access Number — F736
Parameter Type — **Numerical**
Factory Default — **0.0**
Changeable During Run — **Yes**
Minimum — 0.0
Maximum — **Max. Freq.**
Units — Hz

LOD Restart Delay Time

Program ⇒ Special Control Parameters ⇒ Low Output Disable Function ⇒ **LOD Restart Delay Time**

The **Low Output Disable Restart Delay Time** sets the time that, once expired and all standard ASD requirements are met, normal ASD operation resumes.

Direct Access Number — F737
Parameter Type — **Numerical**
Factory Default — **0.0**
Changeable During Run — **Yes**
Minimum — 0.0
Maximum — 3600.0
Units — Seconds

Communication Baud Rate (logic)

Program ⇒ Communication Setting Parameters ⇒ **Communication Settings**

This parameter plays a role in the setup of the communications network by establishing the **Baud Rate** of the communications link.

The communications network includes other ASDs and Host/Control computers that monitor the status of the ASD(s), transfers commands, and loads or modifies the parameter settings of the ASD.

Changes made to this parameter require that the power be cycled (Off then On) for the changes to take effect.

Direct Access Number — F800
Parameter Type — **Numerical**
Factory Default — **9600**
Changeable During Run — **Yes**
Minimum — 1200
Maximum — 9600
Units — BPS

Parity

Program ⇒ Communication Setting Parameters ⇒ **Communication Settings**

This parameter plays a role in the setup of the communications network by establishing the **Parity** setting of the communications link.

The communications network includes other ASDs and Host/Control computers that monitor the status of the ASD(s), transfers commands, and loads or modifies the parameter settings of the ASD.

Changes made to this parameter require that the power be cycled (Off then On) for the changes to take effect.

Settings:

No Parity
Even Parity
Odd Parity

Direct Access Number — F801

Parameter Type — **Selection List**

Factory Default — **Even Parity**

Changeable During Run — **Yes**

ASD Number

Program ⇒ Communication Setting Parameters ⇒ **Communication Settings**

This parameter plays a role in the setup of the communications network by assigning an identification (ID) number to each ASD in the communications network.

The communications network includes other ASDs and Host/Control computers that monitor the status of the ASD(s), transfers commands, and loads or modifies the parameter settings of the ASD.

Changes made to this parameter require that the power be cycled (Off then On) for the changes to take effect.

Direct Access Number — F802

Parameter Type — **Numerical**

Factory Default — **0**

Changeable During Run — **Yes**

Minimum — 0

Maximum — 255

RS232/RS485 Communications Time Out Time

Program ⇒ Communication Setting Parameters ⇒ **Communication Settings**

This parameter plays a role in the setup of the communications network by setting the time that no activity may exist over the communications link before the link is severed (**Time Out**).

The communications network includes other ASDs and Host/Control computers that monitor the status of the ASD(s), transfers commands, and loads or modifies the parameter settings of the ASD.

Changes made to this parameter require that the power be cycled (Off then On) for the changes to take effect.

Direct Access Number — F803

Parameter Type — **Numerical**

Factory Default — **0**

Changeable During Run — **Yes**

Minimum — 0

Maximum — 100

Units — Seconds

RS232/RS485 Communications Time-Out Action

Program ⇒ Communication Setting Parameters ⇒ **Communication Settings**

Direct Access Number — F804

Parameter Type — **Selection List**

Factory Default — **Trip**

Changeable During Run — **Yes**

This parameter plays a role in the setup of the communications network by determining the action to be taken in the event of a time-out (**Time-Out Action**).

The communications network includes other ASDs and Host/Control computers that monitor the status of the ASD(s), transfers commands, and loads or modifies the parameter settings of the drive.

Changes made to this parameter require that the power be cycled (Off then On) for the changes to take effect.

Settings:

No Action
Alarm
Trip

Communication Interval

Program ⇒ Communication Setting Parameters ⇒ **Communication Settings**

Direct Access Number — F805

Parameter Type — **Numerical**

Factory Default — **0.00**

Changeable During Run — **Yes**

Minimum — 0.00

Maximum — 2.00

Units — Seconds

This parameter sets the **Common Serial** response delay time.

Changes made to this parameter require that the power be cycled (Off then On) for the changes to take effect.

TTL Master Output

Program ⇒ Communication Setting Parameters ⇒ **Communication Settings**

Direct Access Number — F806

Parameter Type — **Selection List**

Factory Default — **No Follower** (normal operation)

Changeable During Run — **Yes**

In a master/follower configuration, this setting determines the output parameter of the master ASD that will be used to control the applicable follower ASDs.

Note: *Select **No Follower** if **F826** is configured as a **Master Output** controller. Otherwise, an **EOI** failure will result.*

Changes made to this parameter require that the power be cycled (Off then On) for the changes to take effect.

Settings:

No Follower (normal operation)
Frequency Reference
Output Command Frequency
Torque Command
Output Torque Command

Frequency Point Selection

Program ⇒ Communication Setting Parameters ⇒ **Communication Reference Adjust**

Direct Access Number — F810

Parameter Type — **Selection List**

Factory Default — **Disabled**

Changeable During Run — **Yes**

This parameter selects the communications reference for scaling.

See **F811** — **F814** for further information on this setting.

Note: *Scaling the communications signal is not required for all applications.*

Changes made to this parameter require that the power be cycled (Off then On) for the changes to take effect.

Settings:

Disabled
Common Serial (TTL)
RS232/RS485
Communication Card

Communications Reference Setpoint #1 (%)

Program ⇒ Communication Setting Parameters ⇒ **Communication Reference Adjust**

Direct Access Number — F811

Parameter Type — **Numerical**

Factory Default — **0.00**

Changeable During Run — **Yes**

Minimum — 0.00

Maximum — 100.0

Units — %

When enabled at **F810**, this parameter is used to allow the user to set the gain and bias of the speed control input to the drive when the speed control signal is received via the source selected at **F810**.

Gain and Bias Settings

When operating in the **Speed Control** mode and using one of the control sources from **Settings** above, the settings that determine the gain and bias properties of the input signal are:

- **Communications Reference Speed Setpoint #1 (frequency)** (**F812**),
- the communications input signal value that represents **Communications Reference Speed Setpoint #1 (frequency)**: **F811**,
- **Communications Reference Speed Setpoint #2 (frequency)** (**F814**), and
- the communications input signal value that represents **Communications Reference Speed Setpoint #2 (frequency)**: **F813**.

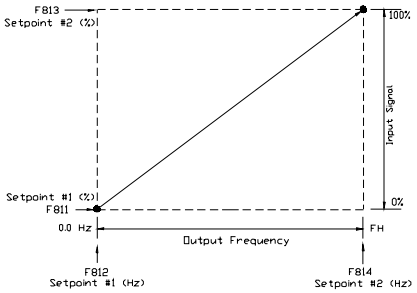

Once set, as the input signal value changes, the output frequency of the drive will vary in accordance with the above settings.

This parameter sets the **Communications Reference** input value that represents **Communications Reference Speed Setpoint #1 (frequency)**. This value is entered as 0 to 100% of the **Communications Reference** input value range.

Changes made to this parameter require that the power be cycled (Off then On) for the changes to take effect.

Communications Speed Setpoint #1 (frequency)

Program ⇒ Communication Setting Parameters ⇒ **Communication Reference Adjust**

This parameter is used to set the gain and bias of the **Communications Reference** speed control input.

See **F811** for further information on this setting.

This parameter sets **Communications Reference Speed Setpoint #1**.

Changes made to this parameter require that the power be cycled (Off then On) for the changes to take effect.

Direct Access Number — F812

Parameter Type — **Numerical**

Factory Default — **0.00**

Changeable During Run — **Yes**

Minimum — 0.00

Maximum — **Max. Freq.** (**F011**)

Units — Hz

Communications Reference Setpoint #2 (%)

Program ⇒ Communication Setting Parameters ⇒ **Communication Reference Adjust**

This parameter is used to set the gain and bias of the **Communications Reference** speed control input.

See **F811** for further information on this setting.

This parameter sets the **Communications Reference** input value that represents **Communications Reference Speed Setpoint #2 (frequency)**. This value is entered as 0 to 100% of the **Communications Reference** input value range.

Changes made to this parameter require that the power be cycled (Off then On) for the changes to take effect.

Direct Access Number — F813

Parameter Type — **Numerical**

Factory Default — **100.0**

Changeable During Run — **Yes**

Minimum — 0.00

Maximum — 100.0

Units — %

Communications Speed Setpoint #2 (frequency)

Program ⇒ Communication Setting Parameters ⇒ **Communication Reference Adjust**

This parameter is used to set the gain and bias of the **Communications Reference** speed control input.

See **F811** for further information on this setting.

This parameter sets the **Communications Reference Speed Setpoint #2**.

Changes made to this parameter require that the power be cycled (Off then On) for the changes to take effect.

Direct Access Number — F814

Parameter Type — **Numerical**

Factory Default — **80.0**

Changeable During Run — **Yes**

Minimum — 0.0

Maximum — **Max. Freq.** (**F011**)

Units — Hz

RS232/RS485 Baud Rate

Program ⇒ Communication Setting Parameters ⇒ **Communication Settings**

This parameter sets the RS232/RS485 baud rate.

Changes made to this parameter require that the power be cycled (Off then On) for the changes to take effect.

Settings:

1200
2400
4800
9600
19200
38400

Direct Access Number — F820

Parameter Type — **Selection List**

Factory Default — **9600**

Changeable During Run — **Yes**

RS232/RS485 Wire Count

Program ⇒ Communication Setting Parameters ⇒ **Communication Settings**

This parameter sets the communications protocol to the 2 or 4 wire method.

Changes made to this parameter require that the power be cycled (Off then On) for the changes to take effect.

Settings:

2 wire
4 wire

Direct Access Number — F821

Parameter Type — **Selection List**

Factory Default — 4

Changeable During Run — **Yes**

RS232/RS485 Response Delay Time

Program ⇒ Communication Setting Parameters ⇒ **Communication Settings**

This parameter sets the **RS232/RS485** response delay time.

Changes made to this parameter require that the power be cycled (Off then On) for the changes to take effect.

Direct Access Number — F825

Parameter Type — **Numerical**

Factory Default — 0.00

Changeable During Run — **Yes**

Minimum — 0.00

Maximum — 2.00

Units — Seconds

RS232/RS485 Master Output

Program ⇒ Communication Setting Parameters ⇒ **Communication Settings**

In a master/follower configuration, this setting determines the output parameter of the master ASD that will be used to control the applicable follower ASDs.

Note: *Select **No Follower** if **F806** is configured as a **Master Output** controller. Otherwise, an **EOI** failure will result.*

Changes made to this parameter require that the power be cycled (Off then On) for the changes to take effect.

Settings:

No Follower (normal operation)
Frequency Reference
Output Command Frequency
Torque Command
Output Torque Command

Direct Access Number — F826

Parameter Type — **Selection List**

Factory Default — **No Follower** (normal operation)

Changeable During Run — **Yes**

Communication Error

Program ⇒ Communication Setting Parameters ⇒ **Communication Error**

In the event of a communication error during a transmission, the command that was transmitted may be cleared or held.

Changes made to this parameter require that the power be cycled (Off then On) for the changes to take effect.

Settings:

Command Request Cleared
Command Request Held

Direct Access Number — F830

Parameter Type — **Selection List**

Factory Default — **Command Request Cleared**

Changeable During Run — **Yes**

Alarms, Trips, and Troubleshooting

Alarms and Trips

This section lists the available user-notification codes of the EOI display and provides information that assists the user in the event that a **Fault** is incurred. The **User Notification** codes are displayed as an indication that a system function or system condition is active (i.e., ATN,ATN2, DB, and DBON). The code is displayed on the EOI for the duration of the activation.

If a user setting or an ASD parameter has been exceeded, or if a data transfer function produces an unexpected result, a condition that is referred to as a **Fault** is incurred.

An **Alarm** is an indication that a **Fault** is imminent if existing operating conditions continue unchanged. An **Alarm** may be associated with an output terminal to notify the operator of the condition remotely, close a contact, or engage a brake. At the least, an **Alarm** will cause an alarm code to appear on the EOI display. Table 10 lists the 16 possible **Alarm** codes that may be displayed during operation of the **G7 ASD**.

In the event that the condition that caused the **Alarm** does not return to its normal operating level within a specified time, the ASD **Faults** and a **Trip** is incurred (**Fault** and **Trip** are sometimes used interchangeably). A **Trip** is a safety feature, and is the result of a **Fault**, that disables the ASD system in the event that a subsystem of the ASD is malfunctioning, or one or more of the variables listed below exceeds its normal range (time and/or magnitude).

- Current,
- Voltage,
- Speed,
- Temperature,
- Torque, or
- Load.

See Table 12 on pg. 176 for a listing of the potential **Trips** and the associated probable causes.

The operating conditions at the time of the trip may be used to help determine the cause of the trip. Listed below are operating conditions that may be used to assist the operator in correcting the problem or that the ASD operator should be prepared to discuss when contacting Toshiba’s Customer Support for assistance.

- What trip information is displayed?
- Is this a new installation?
- Has the system ever worked properly and what are the recent modifications (if any)?
- What is the ASD/Motor size?
- What is the CPU version and revision level?
- What is the EOI version?
- Does the ASD trip when accelerating, running, decelerating, or when not running?
- Does the ASD reach the commanded frequency?
- Does the ASD trip without the motor attached?
- Does ASD trip with an unloaded motor?

Alarms

Table 10 lists the alarm codes that may be displayed during operation of the **G7 ASD**. Each alarm code listed is accompanied by a description and a possible cause. In the event that the source of the malfunction cannot be determined, contact your Toshiba Sales Representative for further information on the condition and for an appropriate course of action.

The **Alarms** are listed in the top-down order that they are checked for activation. Only the first to be detected will be displayed on the Frequency Command screen.

Table 10. G7 Alarms.

EOI Display	Function	Description	Possible Causes
CM1	Comm1 Error	Internal communications error.	• Improperly programmed ASD. • Improper communications settings. • Improperly connected cables.
CM2	Comm2 Error	External communications error.	
EMG	Emergency Off	Output signal from the ASD is terminated and a brake may be applied if so configured.	• Stop|Reset pressed twice at the EOI. • EOFF command received remotely. • ASD reset required.
MOFF	Main Undervoltage	Undervoltage condition at the 3-phase AC input to the ASD.	• Low 3-phase utility voltage.
OC	Over Current	ASD output current greater than **F601** setting.	• Defective IGBT (**U**, **V**, or **W**). • ASD output to the motor is connected incorrectly. Disconnect the motor and retry. • ASD output phase-to-phase short. • The ASD is starting into a spinning motor. • Motor/machine jammed. • Mechanical brake engaged while the ASD is starting or while running. • Accel/Decel time is too short. • Voltage Boost setting is too high. • Load fluctuations. • ASD operating at an elevated temperature.
***OH**	Overheat	ASD ambient temperature excessive.	• ASD is operating at an elevated temperature. • ASD is too close to heat-generating equipment. • Cooling fan vent is obstructed (see Mounting the ASD on pg. 18). • Cooling fan is inoperative. • Internal thermistor is disconnected.
OJ	Timer	Run-time counter exceeded.	• **Type Reset** required; select **Clear run timer**.
* Reset ignored if active.			

EOI Display	Function	Description	Possible Causes
***OLI**	ASD Overload	Load requirement in excess of the capability of the ASD.	• The carrier frequency is too high. • An excessive load. • Acceleration time is too short. • DC damping rate is set too high. • The motor is starting into a spinning load after a momentary power failure. • The ASD is improperly matched to the application.
OLM	Motor Overload	Load requirement in excess of the capability of the motor.	• V/f parameter improperly set. • Motor is locked. • Continuous operation at low speed. • The load is in excess of what the motor can deliver.
***OLR**	Resistor Overload	Excessive current at the **Dynamic Braking Resistor**.	• Deceleration time is too short. • DBR configuration improperly set.
***OP**	Overvoltage	DC bus voltage exceeds specifications.	• ASD attempting to start into a spinning motor after a momentary power loss. • Incoming utility power is above the specified range. • Decel time is too short. • Voltage spikes at the 3-phase input; install inductive filter. • DBR required. • DBR resistance value is too high. • DBR function is turned off. • Overvoltage Stall feature is turned off. • System is regenerating. • Load instability. • Disable the Ridethrough function (**F302**).
OT	Overtorque	Torque requirement in excess of the setting of **F616** or **F617** for a time longer than the setting of **F618**.	• ASD is not correctly matched to the application. • **F616** or **F617** setting is too low. • Obstructed load.
***POFF**	Control Undervoltage	Undervoltage condition at the 5, 15, or the 24 VDC supply.	• Defective Control board. • Excessive load on power supply. • Low input voltage.
PtSt	Reference Point	Two speed-reference frequency setpoint values are too close to each other.	• Two speed reference frequency setpoints are too close to each other (increase the difference).
UC	Undercurrent	Output current of the ASD is below the level defined at **F611** and remains there for the time set at **F612**.	
***** Reset ignored if active.			

User Notification Codes

The **User Notification** codes appear in the top right corner of the **Frequency Command** screen while the associated function is active.

User Notification codes notify the user of active functions that are usually only momentary under normal conditions and are active for the duration of activation only. User notification events are not error conditions and only convey active system functions to the user.

Table 11. User Notification codes.

EOI	Function	Description
Atn	Autotune active	**Atn** indicates that the **Autotune** function is active. If the initial **Autotune** fails for any reason, an automatic retry is initiated if **Other** is selected at **F413**. **Atn2** indicates that an **Autotune** retry is active for the duration of the automatic retry.
dbOn	DC Braking	This code conveys the **DC Injection** function being carried out. The display shows **db** when braking and shows **dbOn** when the motor shaft stationary function is being carried out.

Trips/Faults

A **Trip** is an ASD response to a **Fault** (though, **Fault** and **Trip** are sometimes used interchangeably). A **Trip** is a safety feature that disables the ASD system in the event that a subsystem of the ASD is malfunctioning.

Listed in Table 12 are the possible **Faults** that may cause a **Trip** and the possible causes. When a **Trip** is incurred the system displays the **Fault** screen. The **Fault** screen identifies the active **Fault**.

Table 12

Fault Screen Display	Possible Causes
ASD Overload	• Acceleration time is too short. • DC Injection current is too high. • V/f setting needs to be adjusted. • Motor running during restart. • ASD or the motor is improperly matched to the application.
Autotune Error	• **Autotune** readings that are significantly inconsistent with the configuration information. • A non-3-phase motor is being used. • Incorrect settings at **F400**, **F413**, or **F414**. • Using a motor that has a significantly smaller rating than the ASD. • ASD output cabling is too small, too long, or is being housed in a cable tray with other cables that are producing an interfering EMF. • Motor is running during the **Autotune** function.
Communication Error	• Communication malfunction. • Improper or loose connection. • Improper system settings.

Fault Screen Display	Possible Causes
Control Power Undervoltage	• This fault is caused by an undervoltage condition at the 5, 15, or the 24 VDC supply. • 3-phase input voltage low.
CPU Fault	• CPU malfunction.
DC Bus Undervoltage	• 3-phase input voltage low. • Defective control board. • Excessive load on the power supply. • Undervoltage/Ridethrough settings require adjustment.
DC Fuse Open	• Internal DC bus fuse is open.
Note: *The event that caused the Trip(s) must be corrected or must decrease to less than the threshold value required to cause the trip to allow for a Reset to be recognized. In the event of multiple active trips, the trip displayed will remain until all faults are corrected and all trips are cleared.*	
Dynamic Braking Resistor Overcurrent	• ASD inability to discharge the bus voltage during regeneration. • No dynamic braking resistor (DBR) installed. • Deceleration time is too short. • Improper DBR setup information. • Defective IGBT7 (or IGBT7 ckt.). • 3-phase input voltage is above specification.
Dynamic Braking Resistor Overload	• Deceleration time is too short. • DBR setting adjustment required. • Overvoltage Stall setting adjustment required.
Earth Fault	• Ground fault at the motor. • Ground fault at the output of the ASD. • Current leakage to **Earth Ground**.
EEPROM Data Fault	• Internal EEPROM malfunction.
EEPROM Fault	• EEPROM write malfunction.
Emergency Off	• Emergency Off command received via EOI or remotely.
Encoder Loss	• Encoder signal missing while running during closed-loop operation.
Flash Memory Fault	• Flash memory malfunction.
Gate Array Fault	• Defective Gate Array or Gate Array malfunction.
Input Phase Loss	• 3-phase input to the ASD is low or missing.
Load Drooping	• Load requirement is in excess of the capabilities of the motor.
Load End Short Circuit	• Improper wiring at the ASD output to the motor.
Low Current	• Improper Low Current detection level setting.
Main Board EEPROM Fault	• Internal EEPROM malfunction.

Fault Screen Display	Possible Causes
Motor Overload	• V/f setting needs to be adjusted. • Motor is locked. • Continuous operation at low speed. • Load requirement exceeds ability of the motor. • Startup frequency setting adjustment required.
No Fault	• No active faults.
Option Fault	• Optional device malfunction. • Improper system settings (at ASD or optional device). • Loose or improper connection.
Output Current Protection Fault	• Output current is not within specified limits. • Loose or improper ASD-to-motor connection.
Output Phase Loss	• 3-phase output from the ASD is low or missing.
Note: *The event that caused the Trip(s) must be corrected or must decrease to less than the threshold value required to cause the trip to allow for a Reset to be recognized. In the event of multiple active trips, the trip displayed will remain until all faults are corrected and all trips are cleared.*	
Overcurrent During Acceleration	• V/f setting needs to be adjusted. • Restart from a momentary power outage. • The ASD is starting into a rotating motor. • ASD/Motor not properly matched. • Phase-to-phase short (**U**, **V**, or **W**). • **Accel** time too short. • **Voltage Boost** setting is too high. • Motor/machine jammed. • Mechanical brake engaged while the ASD is running. • ASD current exceeds 340% of the rated FLA on ASDs that are 100 HP or less during acceleration. On ASDs that are greater than 100 HP, this fault occurs when the ASD current exceeds 320% of the rated FLA during acceleration.
Overcurrent During Deceleration	• Phase-to-phase short (**U**, **V**, or **W**). • Deceleration time is too short. • Motor/machine jammed. • Mechanical brake engaged while the ASD is running. • ASD current exceeds 340% of the rated FLA on ASDs that are 100 HP or less during deceleration. On ASDs that are greater than 100 HP, it occurs when the ASD current exceeds 320% of the rated FLA during deceleration.
Overcurrent During Run	• Load fluctuations. • ASD is operating at an elevated temperature. • ASD current exceeds 340% of the rated FLA on ASDs that are 100 HP or less during a fixed-speed run or if during a fixed-speed run the ASD overheats. On ASDs that are greater than 100 HP, it occurs when the ASD current exceeds 320% of the rated FLA on a fixed-speed run.

Fault Screen Display	Possible Causes
Overheat	• Cooling fan inoperative. • Ventilation openings are obstructed. • Internal thermistor is disconnected.
Over Speed	• Result of a motor speed that is greater than the commanded speed when using an encoder for speed control. • Improper encoder connection or setup information. • Defective encoder.
Overtorque	• A torque requirement by the load in excess of the setting of F616 or F617 for a time longer than the setting of F618. • The ASD is improperly matched to the application. • The load is obstructed.
Overvoltage During Acceleration	• Motor running during restart.
Note: *The event that caused the Trip(s) must be corrected or must decrease to less than the threshold value required to cause the trip to allow for a Reset to be recognized. In the event of multiple active trips, the trip displayed will remain until all faults are corrected and all trips are cleared.*	
Overvoltage During Deceleration	• Deceleration time is too short. • DBR value is too high. • DBR required (DBR setup required). • Stall protection is disabled. • 3-phase input voltage is out of specification. • Input reactance required.
Overvoltage During Run	• Load fluctuations. • 3-Phase input voltage out of specification.
PG Type/Connection Error	• ASD is configured to receive a signal from a shaft-mounted encoder and no signal is being received while running. • Disconnection at the Encoder circuit. • Motor is stopped and is generating torque via torque limit control. • ASD is not configured properly.
Phantom Fault	• In a multiple ASD configuration a faulted ASD signals the remaining ASDs that a fault has occurred and shuts down the non-faulted ASDs.
Position Deviation Error	• Operating in the **Position Control** mode and the resulting position exceeds the limits of the **F631** setting.
RAM Fault	• Internal RAM malfunction.
ROM Fault	• Internal ROM malfunction.
Sink/Source Setting Error	• Improperly positioned **Sink/Source** jumper on the control board or on an option device. • **Sink/Source** configuration of an option device is incorrect.
Torque Proving Fault	• Lift-First Pulse Count (F743) adjustment required.

Fault Screen Display	Possible Causes
Typeform Error	• Firmware information (typeform) loaded into the **Gate Driver** board is inconsistent with the device in which the firmware is being used. • The **Gate Driver** board has been replaced. • The **Gate Driver** board is defective.
U Phase Short Circuit	• Low impedance at the U lead of the ASD output.
V Phase Short Circuit	• Low impedance at the V lead of the ASD output.
W Phase Short Circuit	• Low impedance at the W lead of the ASD output.
Note: *The event that caused the Trip(s) must be corrected or must decrease to less than the threshold value required to cause the trip to allow for a Reset to be recognized. In the event of multiple active trips, the trip displayed will remain until all faults are corrected and all trips are cleared.*	

Viewing Trip Information

In the event that the condition causing an **Alarm** does not return to the normal operating level within a specified time, the ASD **Faults** and a **Trip** is incurred.

When a trip occurs, the resultant error information may be viewed either from the **Trip History** screen (Program ⇒ Monitor Setup ⇒ **Trip History**), the **Trip Monitor From ASD** screen (Program ⇒ Monitor Setup ⇒ **Trip Monitor From ASD**), or from the **Monitor** screen.

Trip History

The **Trip History** screen records the system parameters for up to 101 trips (RTC option required). The recorded trips are numbered from zero to 100. Once the **Trip History** record reaches trip number 100, the oldest recorded trip will be deleted with each new record stored (first-in first-out). The **Trip #** field may be selected and scrolled through to view the recorded trip information for a given trip number. The monitored parameters are listed in Table 13 as **At-trip Recorded Parameters** (parameter readings at the time that the trip occurred).

Table 13. **Trip History Record Parameters** (RTC option required).

Trip records that are assigned zero and one are comprised of the full list of monitored parameters (32). Trip records 2 – 18 are comprised of parameters 1 – 16. Trip records 19 – 100 are comprised of parameters 1 – 7.

At-trip Recorded Parameters			
1) Trip Number	9) Bus Voltage	17) Torque Reference	25) ASD Load
2) Trip Type	10) Discrete Input Status	18) Torque Current	26) DBR Load
3) Time and Date	11) OUT1/OUT2/FL Status	19) Excitation Current	27) Input Power
4) Frequency at Trip	12) Timer	20) PID Value	28) Output Power
5) Output Current	13) Post Compensation Frequency	21) Motor Overload	29) Peak Current
6) Output Voltage	14) Feedback (inst.)	22) ASD Overload	30) Peak Voltage
7) Direction	15) Feedback (1 sec.)	23) DBR Overload	31) PG Speed
8) Frequency Reference	16) Torque	24) Motor Load	32) PG Position

Trip Monitor From ASD

The **Trip Monitor From ASD** function records the trip name of up to four trips and catalogs each trip as **Most Recent**, **Second Most Recent**, **Third Most Recent**, and **Fourth Most Recent**. Once reset (**Clear Trip**), the trip records are erased. If no trips have occurred since the last reset, **No Fault** is displayed for each trip record.

Note: *An improper ASD setup may cause some trips — reset the ASD to the **Factory Default** settings before pursuing a systemic malfunction (Program ⇒ Utility Parameters ⇒ Type Reset ⇒ **Restore Factory Defaults**).*

Trip Record at Monitor Screen

The at-trip condition of the last incurred trip may be viewed at the **Monitor** screen (see pg. 45). The **Monitor** screen at-trip record is erased when the ASD is reset and may be viewed without the use of the RTC option.

Clearing a Trip

Once the cause of the trip has been corrected, performing a **Reset** re-enables the ASD for normal operation.

The record of a trip may also be cleared using either of the following methods:

- Cycling power (trip info may be saved via **F602** if desired),
- Pressing the **Stop**|**Reset** key twice,
- Remotely via the communications channel,
- Momentarily connecting terminal **RES** to **CC** of the **Control Terminal Strip**, or
- Via Program ⇒ Utility Parameters ⇒ Type Reset ⇒ **Clear Trip** (clears **Trip Monitor From ASD**).

Enclosure Dimensions and ConduitPlate Information

G7 Part Numbering Convention.

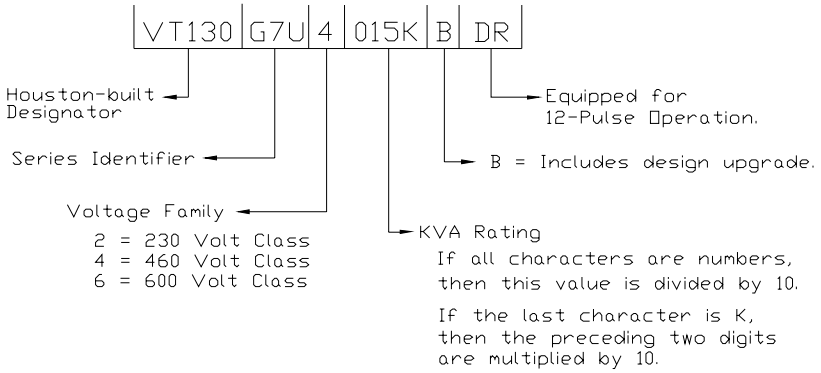

Note: *The Type 1 enclosed versions of these drives meet or exceed the specification* ***UL 1995****, the* ***Standard for Heating and Cooling Equipment****, and complies with the applicable requirements for installation in a compartment handling conditioned air. The equipment listed in this manual meets or exceeds the criteria for CE certification and carries the CE label.*

Note: *For CE compliance, all Toshiba ASD enclosures with hinged doors shall have a lock placed on the standard door fastener or be fitted with the Toshiba lock kit (P/N 53730).*

Note: *All Toshiba ASD enclosures carry an IP20 rating.*

Enclosure Dimensions/Weight

Table 14.

Model Number VT130G7U	Fig.	A (in/mm)	B (in/mm)	C (in/mm)	D (in/mm)	E (in/mm)	F (in/mm)	G (in/mm)	H (in/mm)	Conduit Plate Number (see pg. 187 – 188)		Shipping Weight (lbs.)
										Bottom	Top	
2010B	22	8.47/215	7.28/185	7.33/186	8.47/215	7.95/202	6.74/171	0.53/13	0.23/6	49462	N/A	12
2015B												
2025B												
2035B												
2055B												
2080B												
2110B		14.22/361	12.16/309	11.23/285	14.22/361	13.05/331	11.46/291	0.55/14	0.28/7	49033	N/A	48

Table 14. (Continued)

Model Number VT130G7U	Fig.	A (in/mm)	B (in/mm)	C (in/mm)	D (in/mm)	E (in/mm)	F (in/mm)	G (in/mm)	H (in/mm)	Conduit Plate Number (see pg. 187 – 188)		Shipping Weight (lbs.)
										Bottom	Top	
2160B	22	14.22/361	12.16/309	11.23/285	14.22/361	13.05/331	11.46/291	0.55/14	0.28/7	49033	N/A	50
2220B												52
2270B		15.72/399								49032		54
2330B	23	24.63/625	17.5/445	12.81/325	22.32/567	23.75/603	14.25/362	0.75/19	0.38/10	50097	N/A	111
2400B		26.47/672								49932		157
2500B												167
2600B		38.63/981	17.5/445	13.78/350	36.35/923	37.75/959	12.63/321	0.75/19	0.63/16	49900	49468	261
2750B												265
210KB	24	50.00/1270	24.15/613	20.00/508	46.15/1172	48.50/1232	12.00/305	0.75/19	0.69/18	54086	54086	466
212KB												475
215KB												496
4015B	22	8.47/215	7.28/185	7.33/186	8.47/215	7.95/202	6.74/171	0.53/13	0.23/6	49462	N/A	13
4025B												
4035B												
4055B												
4080B												
4110B												15
4160B		14.22/361	12.16/309	11.23/285	14.22/361	13.05/331	11.46/291	0.55/14	0.28/7	49033	N/A	50
4220B												52
4270B												53
4330B												54
4400B												58
4500B	23	24.63/625	17.5/445	12.81/325	22.32/567	23.75/603	14.25/362	0.75/19	0.38/10	50097	N/A	121
4600B												147
4750B												157
410KB		26.47/672								49932		167
412KB		38.63/981	17.5/445	13.78/350	36.35/923	37.75/959	12.63/321	0.75/19	0.63/16	49900	49468	261
415KB												265

Table 14. (Continued)

Model Number VT130G7U	Fig.	A (in/mm)	B (in/mm)	C (in/mm)	D (in/mm)	E (in/mm)	F (in/mm)	G (in/mm)	H (in/mm)	Conduit Plate Number (see pg. 187 – 188)		Shipping Weight (lbs.)
										Bottom	Top	
420KB	24	50.00/1270	24.15/613	20.00/508	46.15/1172	48.50/1232	12.00/305	0.75/19	0.69/18	54086	54086	466
425KB												475
430KB												496
435KB		73.00/1854	24.00/610	20.00/508	68.00/1727	71.00/1803	16.00/406	0.75/19	0.69/18	51342	51342	665
6015B	22	8.47/215	7.28/185	7.33/186	8.47/215	7.95/202	6.74/171	0.53/13	0.23/6	49462	N/A	13
6025B												
6035B												
6060B												
6080B												
6120B												
6160B												
6220B		14.22/361	12.16/309	11.23/285	14.22/361	13.05/331	11.46/291	0.55/14	0.28/7	49033	N/A	50
6270B												52
6330B												54
6400B												56
6500B												58
6600B	23	24.63/625	17.5/445	12.81/325	22.32/567	23.75/603	14.25/362	0.75/19	0.38/10	50097	N/A	155
6750B												162
610KB		38.63/981	17.5/445	13.78/350	36.35/923	37.75/959	12.63/321	0.75/19	0.63/16	49900	49468	261
612KB												
615KB												265
620KB	24	50.00/1270	24.15/613	20.00/508	46.15/1172	48.50/1232	12.00/305	0.75/19	0.69/18	54086	54086	466
625KB												475
630KB												490

Figure 22.

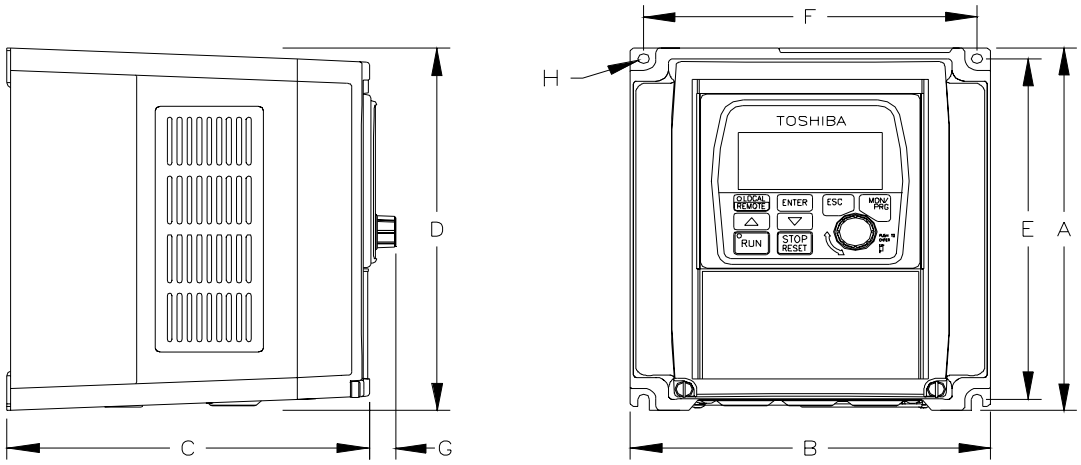

Figure 23.

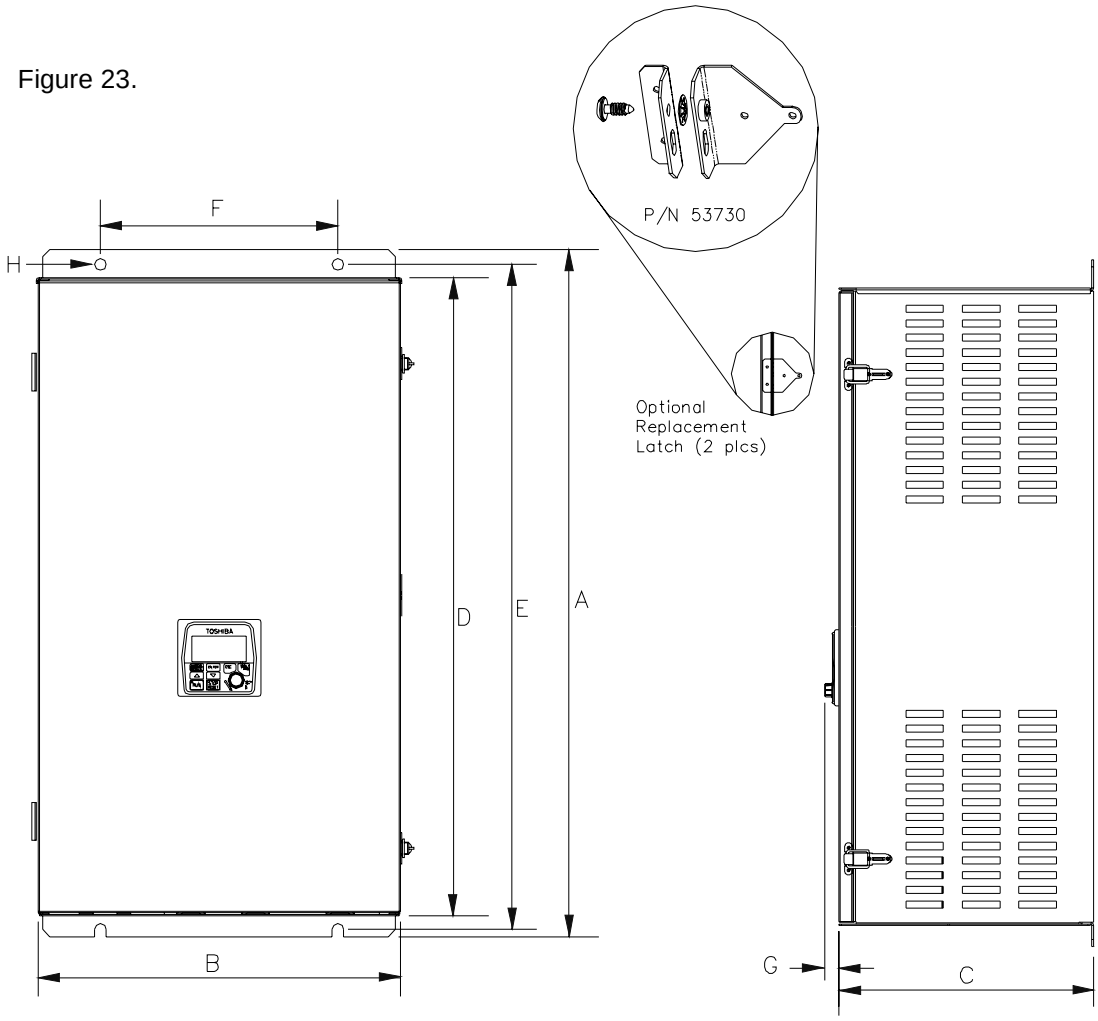

Figure 24.

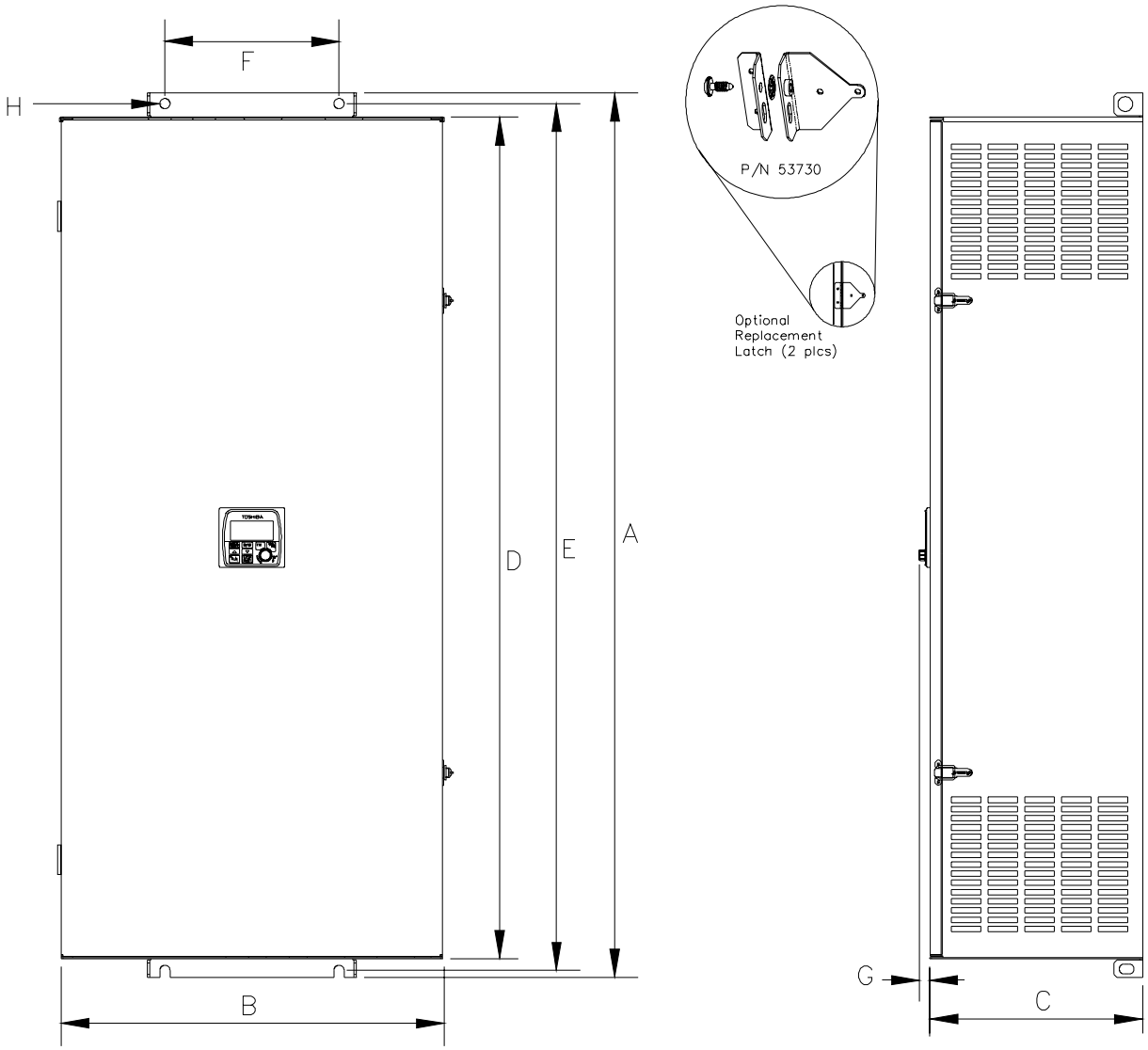

Conduit Plate Information

The conduit plate information provided below is for the 0.75 to 350 HP **G7 ASDs** of the 230, 460, and 600 volt product lines. Each bottom or top conduit plate may be cross referenced to the applicable device using the information in Table 14 on page 182.

Note: *Unless otherwise specified, all dimensions are in inches.*

Figure 25.

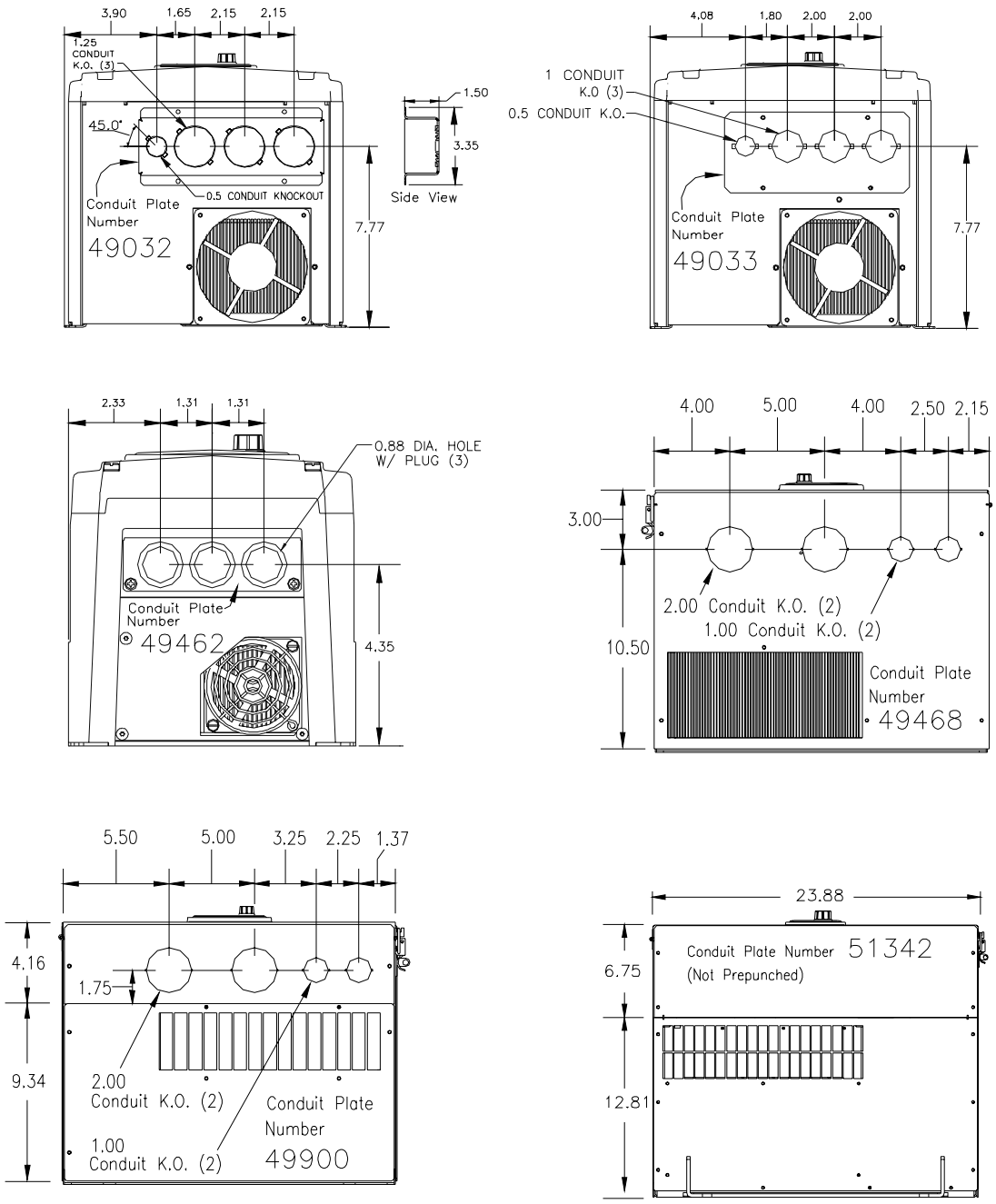

Figure 26.

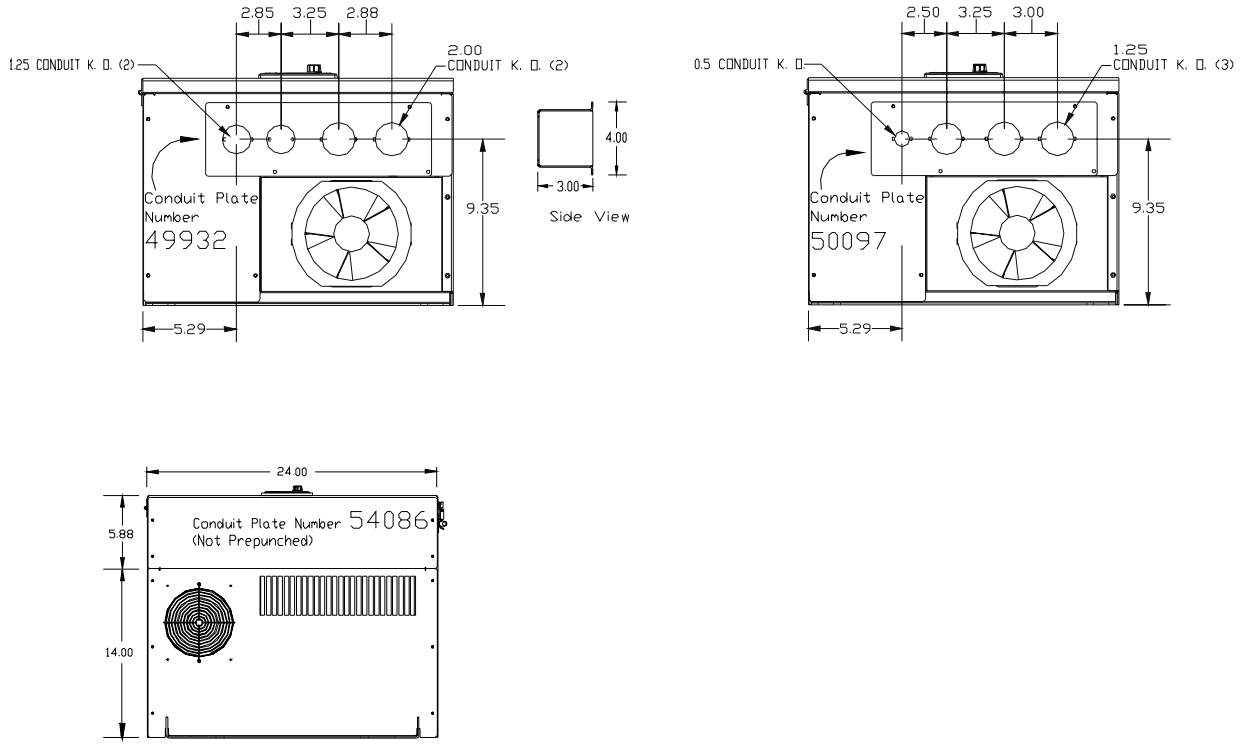
2.85
3.25
2.88
1.25 CONDUIT K. O. (2)
2.00
CONDUIT K. O. (2)
Conduit Plate
Number
49932
9.35
5.29
4.00
3.00
Side View
2.50
3.25
3.00
0.5 CONDUIT K. O.
1.25
CONDUIT K. O. (3)
Conduit Plate
Number
50097
9.35
5.29
24.00
5.88
14.00
Conduit Plate Number 54086
(Not Prepunched)

Conduit Extender Box (option)

The Conduit Extender Box (P/N ASD-Conduit-1) may be used when more room is required at the ASD conduit connection point. This option makes adding and removing conduit easier and quicker.

Conduit Extender Box Installation

1. Remove the Conduit Plate (P/N **49462** of Figure 27).
2. Install the Conduit Extender Box (P/N **53354** of Figure 28) and secure using the 2 screws from the conduit plate.
3. Complete the conduit and wiring connections.
4. Install the Conduit Extender Box cover (P/N **53355** of Figure 28).

Figure 27. Remove Conduit Plate.

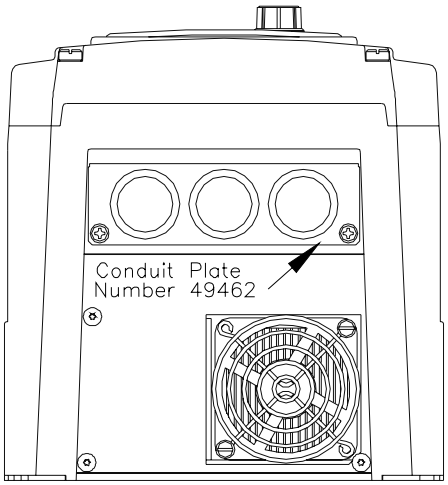

Figure 28. Conduit Box/Cover.

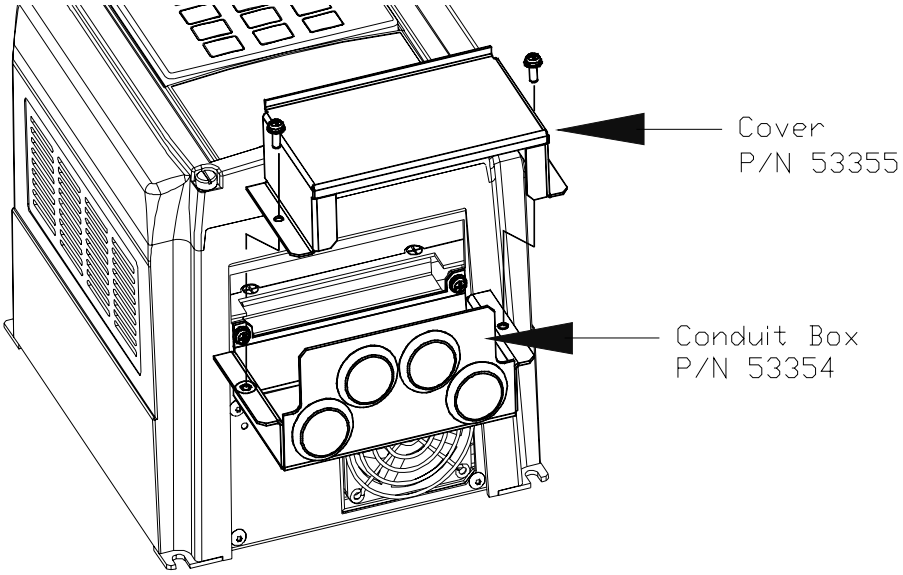

EOI Remote Mounting

The **G7 ASD** may be controlled from a remotely-mounted EOI. For safety and application-specific reasons, some ASD installations will warrant that the operator not be in the vicinity during operation or that the EOI not be attached to the ASD housing. The EOI may be mounted either with or without the optional G7 Remote Mounting Kit (P/N ASD-MTG-KIT). The ease of installation is enhanced by the G7 Remote Mounting Kit which allows for easier cable routing and EOI placement.

The EOI can operate up to distances of 15 feet from the ASD via the Common Serial (TTL) Port. For distances beyond 15 feet, the RS232/RS485 port is recommended.

Remote mounting will also allow for multiple EOI mountings at one location if controlling and monitoring several ASDs from a central location is required.

The optional dust cover (P/N ASD-BPC) may be used to cover the front panel opening of the ASD housing after removing the EOI. An EOI extender cable is required for remote mounting. EOI extender cables are available in lengths of 7, 10, or 15 feet and may be ordered through your sales representative.

Remote EOI Required Hardware

EOI Mounting Hardware

- 6-32 x 5/16” Pan Head Screw — P/N 50595 (4 ea.)
- #6 Split-Lock Washer — P/N 01884 (4 ea.)
- #6 Flat Washer — P/N 01885 (4 ea.)

Bezel Plate Mounting Hardware

- Bezel Plate — P/N 52291
- 10-32 Hex Nut — P/N 01922 (4 ea.)
- #10 Split-Lock Washer — P/N 01923 (4 ea.)
- #10 Flat Washer — P/N 01924 (4 ea.)
- Dust Cover — P/N ASD-BPC (Optional)

Extender Cables

- ASD-CAB7F: Cable, RJ45, 7 ft.
- ASD-CAB10F: Cable, RJ45, 10 ft.
- ASD-CAB15F: Cable, RJ45, 15 ft.

EOI Installation Precautions

Install the unit securely in a well ventilated area that is out of direct sunlight using the four mounting holes of the EOI. The ambient temperature rating for the EOI is 14 to 104° F (-10 to 40° C).

- Select a mounting location that is easily accessible by the user.
- Avoid installation in areas where vibration, heat, humidity, dust, metal particles, or high levels of electrical noise (EMI) are present.
- Do not install the EOI where it may be exposed to flammable chemicals or gases, water, solvents, or other fluids.
- Turn the power on only after securing the front cover to the ASD.

EOI Remote Mounting w/o the ASD-MTG-KIT

Note: *See Figure 29 for the dimensions and the item locations referenced in steps 1 through 5.*

1. At the EOI mounting location, identify and mark the location of the 3.80” by 3.29” hole and the 7/32” screw holes.
2. Cut the 3.80” by 3.29” rectangular hole.
3. Drill the four 7/32” screw holes.
4. Attach and secure the EOI to the front side of the mounting location using the four 6-32 x 5/16” pan head screws, the #6 split lock washers, and the #6 flat washers.
5. Connect the RJ-45 extension cable(s).

EOI Dimensions (mounting)

Figure 29. EOI Mounting Dimensions.

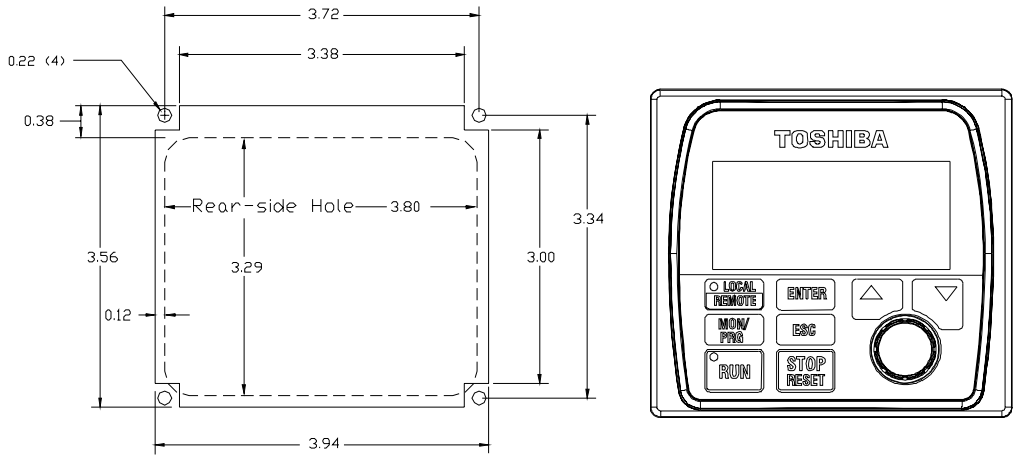

EOI Remote Mounting using the ASD-MTG-KIT

Note: *See Figures 30 and 31 for the dimensions and the item locations referenced in steps 1 through 6.*

1. At the EOI mounting location, identify and mark the locations of the 5.00” by 4.60” hole and the four 11/32” screw holes.
2. Cut the 5.00” by 4.60” rectangular hole.
3. Drill the four 11/32” holes.
4. Attach and secure the Bezel plate to the front side of the mounting location using the four 10-32 hex nuts, #10 split lock washers, and the #10 flat washers.
5. Attach and secure the EOI to the front side of the Bezel plate using the four 6-32 x 5/16” pan head screws, #6 split lock washers, and the #6 flat washers.
6. Connect the RJ-45 extension cable(s).

EOI ASD-MTG-KIT Dimensions (mounting)

Figure 30. EOI Bezel Plate Mounting Dimensions.

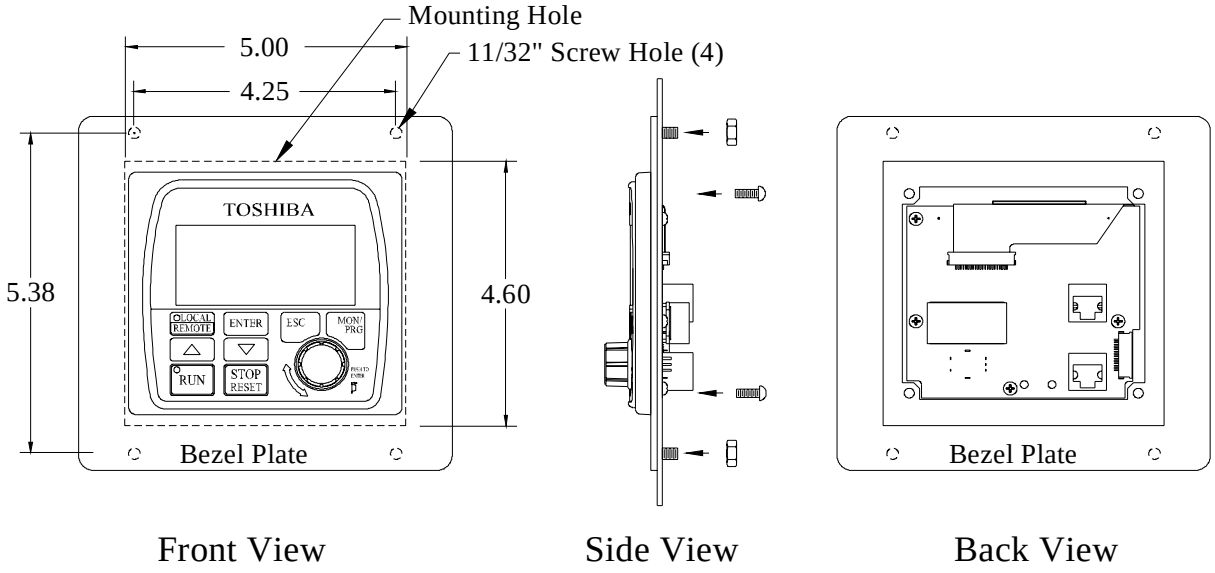

Figure 31. Screw Length Precaution.

CAUTION: Failure to use the correct hardware may result in damage to the outer surface of the EOI panel and/or improper seating of the panel to the bezel plate. Use caution when mounting the EOI assembly to ensure that the internal thread clearance is maintained.

Current/Voltage Specifications

Table 15. 230 Volt NEMA Type-1/IP-20 Chassis standard ratings table.

Model VT130G7U	Rated KVA	Motor HP/Kw	Input Voltage 3-Ph 50/60 ± 2 Hz	Output Voltage 3-Ph Variable Frequency	Output Current 100/110% Cont.	Overload Current 150% for 60 Secs.	Overload Current 150% for 120 Secs.
2010B	1.0	0.75/0.56	200 – 240 VAC (±10%)	Input Voltage Level (Max.)	3.5/3.9 A		5.3 A
2015B	1.5	1.0/0.75			5.0/5.5 A		7.5 A
2025B	2.5	2.0/1.5			7.0/7.7 A		10.5 A
2035B	3.5	3.0/2.2			10.0/11.0 A		15.0 A
2055B	5.5	5.0/3.7			16.0/17.6 A		24.0 A
2080B	8.0	7.5/5.6			23.0/25.3 A		34.5 A
2110B	11	10/7.5			30.0/33.0 A		45.0 A
2160B	16	15/11.2			45.0/49.5 A		67.5 A
2220B	22	20/14.9			60.0/66.0 A		90.0 A
2270B	27	25/18.5			71.0/78.1 A		106.5 A
2330B	33	30/22.0			90.0/99.0 A		135.0 A
*** 2400B**	40	40/30			110/121.0 A		126.5 A
*** 2500B**	50	50/37			138/151.8 A		158.7 A
*** 2600B**	60	60/45			172/189.2 A	197.8 A	
*** 2750B**	75	75/55			206/226.6 A	236.9 A	
*** 210KB**	100	100/75			275/302.5 A	316.3 A	
*** 212KB**	125	125/90			343/377.3 A	394.5 A	
*** 215KB**	150	150/110			415/456.5 A	477.3 A	

Note: **12-Pulse option available.*

Table 16. 460 Volt NEMA Type-1/IP-20 Chassis standard ratings table.

Model VT130G7U	Rated KVA	Motor HP/Kw	Input Voltage 3-Ph 50/60 ± 2 Hz	Output Voltage 3-Ph Variable Frequency	Output Current 100/ 110% Cont.	Overload Current 130% for 120 Secs.	Overload Current 150% for 60 Secs.	Overload Current 150% for 120 Secs.
4015B	1.5	1.0/0.75	380 – 480 VAC (±10%)	Input Voltage Level (Max.)	2.7/3.0 A	N/A	N/A	4.1 A
4025B	2.5	2.0/1.5			3.5/3.9 A			5.3 A
4035B	3.5	3.0/2.2			5.0/5.5 A			7.5 A
4055B	5.5	5.0/3.7			8.0/8.8 A			12.0 A
4080B	8.0	7.5/5.6			11.5/12.7 A			17.3 A
4110B	11.0	10.0/7.5			15.0/16.5 A			22.5 A
4160B	16.0	15.0/11.2			23.0/25.3 A			34.5 A
4220B	22.0	20.0/14.9			30.0/33.0 A			45.0 A

Table 16. (Continued) 460 Volt NEMA Type-1/IP-20 Chassis standard ratings table.

Model VT130G7U	Rated KVA	Motor HP/Kw	Input Voltage 3-Ph 50/60 ± 2 Hz	Output Voltage 3-Ph Variable Frequency	Output Current 100/ 110% Cont.	Overload Current 130% for 120 Secs.	Overload Current 150% for 60 Secs.	Overload Current 150% for 120 Secs.
4270B	27.0	25.0/18.5	380 – 480 VAC (±10%)	Input Voltage Level (Max.)	38.0/41.8 A			57.0 A
4330B	33.0	30.0/22.0			45.0/49.5 A			67.5 A
4400B	40.0	40.0/30.0			57.0/62.7 A			85.5 A
4500B	50.0	50.0/37.0			71.0/78.1 A			106.5 A
*** 4600B**	60.0	60.0/45.0			83.0/91.3 A			124.5 A
*** 4750B**	75.0	75.0/55.0			104.0/114.4 A			156.0 A
*** 410KB**	100	100/75.0			138.0/151.8 A			207.0 A
*** 412KB**	125	125/90.0			172.0/189.2 A		258.0 A	N/A
*** 415KB**	150	150/110			206.0/226.6 A		309.0 A	
*** 420KB**	200	200/150			275.0/302.5 A		412.5 A	
*** 425KB**	250	250/185			343.0/377.3 A		514.5 A	
*** 430KB**	300	300/220			415.0/456.5 A		622.5 A	
*** 435KB**	350	350/243			447.0/491.7 A	586.8 A	670.5 A	
Note: **12-Pulse option available.*								

Table 17. 600 Volt NEMA Type-1/IP-20 Chassis standard ratings table.

Model VT130G7U	Rated KVA	Motor HP/Kw	Input Voltage 3-Ph 50/60 ±2 Hz	Output Voltage 3-Ph Variable Frequency	Output Current 100/ 110% Cont.	Overload Current 150% for 60 Secs.	Overload Current 150% for 120 Secs.
6015B	1.5	1.0/0.75	495 – 600 VAC (+5/-10%)	Input Voltage Level (Max.)	2.1/2.3 A	N/A	3.2 A
6025B	2.5	2.0/1.5			3.0/3.3 A		4.5 A
6035B	3.5	3.0/2.2			4.0/4.4 A		6.0 A
6060B	6.0	5.0/3.7			6.1/6.7 A		9.2 A
6080B	8.0	7.5/5.0			9.0/9.9 A		13.5 A
6110B	11.0	10.0/7.5			12.0/13.2 A		18.0 A
6160B	16.0	15.0/11.2			17.0/18.7 A		25.5 A
6220B	22.0	20.0/14.9	495 – 600 VAC (±10%)		22.0/24.2 A		33.0 A
6270B	27.0	25.0/18.5			27.0/29.7 A		40.5 A
6330B	33.0	30.0/22.0			32.0/35.2 A		48.0 A
6400B	40.0	40.0/30.0			41.0/45.1 A		61.5 A
6500B	50.0	50.0/37.0			52.0/57.2 A		78.0 A
6600B	60.0	60.0/45.0			62.0/68.2 A		93.0 A
6750B	75.0	75.0/55.0			77.0/84.7 A		115.5 A
*** 610KB**	100	100/75.0			99.0/108.9 A		148.5 A
*** 612KB**	125	125/90.0			125.0/137.5 A	187.5 A	N/A
*** 615KB**	150	150/110			150.0/165.0 A	225.0 A	
*** 620KB**	200	200/150			200.0/220.0 A	300.0 A	
*** 625KB**	250	250/185			250.0/275.0 A	375.0 A	
*** 630KB**	300	300/224			289.0/317.9 A	433.5 A	
Note: **12-Pulse option available.*							

Cable/Terminal Specifications

Installation should conform to the 2002 National Electrical Code Article 110 (NEC) (Requirements for Electrical Installations), all regulations of the Occupational Safety and Health Administration, and any other applicable national, regional, or industry codes and standards.

Note: *The following ratings are guidelines and shall not be the sole determining factor of the lug or wire size used with the ASD. Application-specific applicables, wire insulation type, conductor material, and local and regional regulations are but a few of the considerations when selecting the actual lug and wire type to be used with the ASD.*

Note: *Cable/Terminal specifications are based on the rated current of the ASD and* ***Do Not*** *include the 10% Service Factor.*

For further installation information see the section titled Installation and Connections on pg. 17.

Table 18. 230-volt G7 ASD Cable/Terminal Specifications.

Model VT130G7U	MCP Rating (Amps)	Typical Wire/Cable Size (AWG or kcmil)				Lug Size Range
		Input/Output Power		AM, FM, and II Terminals	Control Terminals	Wire-Size/Lug-Capacity for Input/Output Power
		Recommended	Maximum			
2010B	15	14	10	20 (3-core shield)	18 (2-core shield)	24 to 8
2015B	15	14	10			
2025B	15	14	10			
2035B	20	14	10			
2055B	30	12	10			
2080B	50	10	10			
2110B	50	8	4			18 to 4
2160B	75	6	4			
2220B	100	4	4			
2270B	125	3	2			16 to 1
2330B	150	2	2			10 to 1/0
2400B	175	1/0	2/0			
2500B	200	2/0	2/0			12 to 4/0
2600B	250	*1/0	*4/0			*(6 to 250)
2750B	300	*2/0	*4/0			
210KB	400	*4/0	*500			*(1/0 to 500)
212KB	500	*300	*500			
215KB	600	*400	*500			

Note: *Input and Output power wires require shielding for CE compliance.*

Note: *(*) Indicates that the item is one of a set of two parallel cables.*

Table 19. 460-volt G7 ASD Cable/Terminal Specifications.

Model VT130G7U	MCP Rating (Amps)	Typical Wire/Cable Size (AWG or kcmil)				Lug Size Range
		Input/Output Power		AM, FM, and II Terminals	Control Terminals	Wire-Size/Lug-Capacity for Input/Output Power
		Recommended	Maximum			
4015B	15	14	10	20 (3-core shield)	18 (2-core shield)	24 to 8
4025B	15	14	10			
4035B	15	14	10			
4055B	15	14	10			
4080B	20	14	10			
4110B	30	12	10			
4160B	30	10	4			18 to 4
4220B	50	8	4			
4270B	75	8	4			
4330B	75	6	4			
4400B	100	4	4			
4500B	100	3	2			16 to 1
4600B	125	2	2			10 to 1/0
4750B	175	1	**2			
410KB	200	2/0	2/0			12 to 4/0
412KB	250	*1/0	*4/0			*(6 to 250)
415KB	300	*2/0	*4/0			
420KB	400	*4/0	*500			*(1/0 to 500)
425KB	500	*300	*500			
430KB	600	*400	*500			
435KB	700	*500	*500			

Note: *Input and Output power wires require shielding for CE compliance.*

Note: *(*) Indicates that the item is one of a set of two parallel cables.*

Note: *(**) Indicates that a 1.5” conduit orifice is required if using the recommended cable size.*

Table 20. 600-volt G7 ASD Cable/Terminal Specifications.

Model VT130G7U	MCP Rating (Amps)	Typical Wire/Cable Size (AWG or kcmil)				Lug Size Range
		Input/Output Power		AM, FM, and II Terminals	Control Terminals	Wire-Size/Lug-Capacity for Input/Output Power
		Recommended	Maximum			
6015B	15	14	10	20 (3-core shield)	18 (2-core shield)	24 to 8
6025B	15	14	10			
6035B	15	14	10			
6060B	15	14	10			
6080B	15	14	10			
6120B	30	14	10			
6160B	30	10	10			
6220B	50	10	4			18 to 4
6270B	50	8	4			
6330B	50	8	4			
6400B	75	6	4			
6500B	100	6	4			
6600B	100	4	2			16 to 1
6750B	125	3	2			
610KB	150	1	*4/0			*(6 to 250)
612KB	200	2/0	*4/0			
615KB	250	3/0	*4/0			
620KB	300	*2/0	*500			*(1/0 to 500)
625KB	400	*3/0	*500			
630KB	500	*4/0	*500			

Note: *Input and Output power wire requires shielding for CE compliance.*

Note: *(*) Indicates that the item is one of a set of two parallel cables.*

Note: *(**) Indicates that a 1.5” conduit orifice is required if using the recommended cable size.*

Dynamic Braking Resistor Wire/Cable Specifications

When using a **Dynamic Braking Resistor** (DBR), use thermal protection and an input contactor that will open the input 3-phase power circuit to the ASD in the event that a DBR over-temperature condition occurs. In the event of a power source over-voltage condition or an ASD failure the input contactor will prevent hazardous DBR temperatures.

Because the heat generated by the DBR will affect the cooling capacity of the heatsink, the resistor pack should be mounted above or to the side of the ASD — **Never below the ASD**. Maintain a minimum of six inches between the resistor pack and the ASD unit.

Heavy duty DBRs should be wired using the same gauge wire as the motor leads. Light duty DBRs may use one wire size smaller (AWG) than the motor leads.

The total wire length from the ASD to the DBR should not exceed ten feet.

The wiring from the ASD to the DBR should be twisted approximately two twists per foot throughout the length of the wire.

If EMI/RFI noise is of concern, the DBR wiring should be three-core screened cable. The screen should connect to the ASD enclosure and the resistor enclosure.

Link Reactor Information

Selection of a link reactor (DCL) is often application specific. This document will provide guidelines for selecting link reactors for the G7 series of drives.

The 600 Volt series drives above 15 HP allow for the reactor to be mounted internal to the drive. All other G7 drives require that the DCL be mounted externally.

When selecting and mounting an external DCL, the air flow around the reactor, the thermal capability of the reactor, the allowable voltage loss, and the amount of harmonic reduction required will be considerations.

Table 21. DCL Selection Table.

Model Number VT130G7U	DCL Part Number	DCL Inductance (mH)	DCL (Amps)
2080B	36350	0.40	30.0
2110B	36351	0.30	38.0
2160B	36376	0.20	57.0
2220B	36353	0.20	76.0
2270B	36355	0.10	114
4110B	36358	1.30	20.0
4160B	36359	0.90	29.0
4220B	36360	0.70	39.0
4270B	36361	0.50	50.0
4330B	36363	0.40	75.0
4400B	36364	0.30	88.0
4500B	36365	0.20	114.0
4600B	36365	0.20	114.0
4750B	36366	0.20	141.0
410KB	42769	0.14	205.0
6060B	36356	2.50	11.0
6120B	36359	0.90	29.0
6160B	36359	0.90	29.0
6220B	36360	0.70	39.0
6270B	36362	0.50	55.0
6330B	36361	0.50	50.0
6400B	36363	0.40	75.0
6500B	36363	0.40	75.0
6600B	36364	0.30	88.0
6750B	36365	0.20	114.0
610KB	36366	0.20	141.0
612KB	36367	0.15	175.0
615KB	41443	0.19	260.0
620KB	41443	0.19	260.0
625KB	45259	0.10	360.0

G7 Optional Devices

The ASD may be equipped with several options which are used to expand the functionality of the ASD. Table 22 lists the available options and their functions.

Table 22. G7 Optional devices and functions.

Item	Device Function
ASD7-SIM2	Emulates the input control signals of the **G7 ASD** via switches and pots.
ASD-BPC	Provides dust protection for the **G7 ASD** when the EOI is removed or mounted remotely.
ASD-CAB-PC	Female 9-pin d-type to RJ-45 (PC to ASD cable).
ASD-EOI-N4	A replacement NEMA-4 EOI (without Rotary Encoder)
ASD-ISO-1	Provides isolation of the **Control Board** output circuit from the **AM**/**FM** output and from the **II** input.
ASD-MTG-KIT	EOI Remote Mounting Kit. See the section titled EOI Remote Mounting on pg. 190 for further information on this option.
ASD-RTC	The **Real Time Clock** provides the user with a time stamp of the **Start**, **Run**, and **Fault** events.
ASD-SS	This option board is used to provide a hardware-based speed search function. ***Note:*** *The ASD-SS is a factory-authorized service center-installed option for all 1 – 5 HP ASDs, 10 – 25 HP 230 volt ASDs, and 15 – 40 HP 460 volt ASDs (see F314).* ***Note:*** *On ASDs that are rated at 50 HP and above, the **ASD-SS** hardware option cannot be used if using a shaft-mounted encoder.*
ASD-TB1-AC1	Provides 120 VAC discrete terminal activation and additional I/O terminals.
Conduit Extender Box (option)	Provides more working space for conduit installation than the standard conduit plate.
HS35 Encoder	Provides rotational speed and/or directional information. The Encoder is mounted on the motor shaft or the shaft-driven equipment. ***Note:*** *On ASDs that are rated at 50 HP and above, the **ASD-SS** (Speed Search) hardware option board cannot be used if using a shaft-mounted encoder.*
ASD – Multicom Option Boards	
Note:	*Multicom boards are identified as ASD-Multicom-A, -B, -F, etc.*
-A	Incorporates the **Modbus**, **Profibus**, or **Device Net** communications protocol for system control and is able to receive and process **Vector Control** feedback.
-B	Provides a line driver and open collector interface for system control.
-F	The **Tosline-F10** interface provides high-speed communication to Toshiba control equipment via twisted pair wiring.
-J	Able to receive and process vector control feedback via line driver or open collector interface.
-S	The **Tosline-S20** interface provides high-speed communication to Toshiba control equipment via fiber optics.
-X	Provides extended terminal I/O functions for monitoring, feedback, and control.
Note:	*See the user manual of the applicable option for further information on each item.*

G7 ASD Spare Parts Listing

Table 23. 230 Volt 0.75 – 150 HP Spare Parts Listing.

MODEL NUMBER	CONTROL FUSE	DC BUS FUSE	CONTACTOR	FAN		RESISTOR	TRANSISTORS		RECT.	MAIN CAPS	MOV
VT130G7U	**FU1 (A)**	**FU2**	**MS1/MS2**	**FAN1**	**FAN2/3**	**R21A/R22**	**IGM**	**IGBT7**	**RECT.**	**CAP**	**MOV 1/2,3**
2010B	N/A	00646	49648A	50037	N/A	49648A	56620A				
2015B							56620B				
2025B							56620C				
2035B							56620D				
2055B		00647					56620E				
2080B		50248	49648G		51088	49648G	56621A				
2110B		00638	45678	46023	N/A	00388	55624	*	45056	45593 (2)	49054
2160B		00640					55625	*	45009	30536 (2)	
2220B		00641				00388 (2)	47963	49036		34835 (2)	
2270B			45813					41803	47342		
2330B	00441 (2)	00642	42338	44362			47964 (3)		52095	48019 (2)	
2400B	37160 (2)	00626				35489	47969 (3)	52806	46466	34835 (6)	49047
2500B		00628	42767		32038		47970 (3)		45241 (6)	48020 (6)	30965/ 03672 (2)
2600B		44272 (2)	42768	48718		30634 (2)	50000 (3)	33207	45242 (6)	48019 (8)	55318 (3)
2750B		43588 (2)						33785		48020 (8)	
210KB	39660 (2)	37578 (2)	51973/37698	54140	00226	35489 (2)/ 53747	50000 (6)	47235			30965/ 03672 (2)
212KB			51758/37698						45241 (12)	37568 (6)	
215KB				55383	00226/ 00224				45242 (6)	37568 (8)	

*Contained within the IGM module.

The following item is common to the above-listed typeforms.

EOI — 49012

Parenthesized are the total quantities per model for the part immediately above the parenthesized quantity only. Toshiba recommends a spare parts inventory of 2 minimum for the parts listed. If the total quantity per unit is 3 or more then the suggested spare parts inventory is one third of the total unit quantity (2 minimum).

Table 24. 230 Volt 0.75 – 150 HP **PCB** Spare Parts Listing.

MODEL NUMBER	PCB Part Numbers														
	34499	48605	48776	49648	51389	51507	52266	53288	53300	53390	56000	56220	56221	56222	56223
VT130G7U	A, B, C, etc. is the PCB Typeform.														
2010B				A							A	A			
2015B				A							A	B			
2025B				A							A	C			
2035B				A							A	D			
2055B				A							A	E			
2080B				G							A		A		
2110B		A									A				A
2160B		B									A				A
2220B		C									A				B
2270B		D									A				B
2330B			A1		A (3)	A					A			A	
2400B			A1			A	52266			A (3)	A			N	
2500B			A1			A	52266			A (3)	A			P	
2600B	D		A1			A	52266	A (3)	A (3)		F			P	
2750B	D		A1			A	52266	A (3)	A (3)		F			Q	
210KB	E		A1			A	52266	A (6)	B (3)		F			A	
212KB	E		A1			A	52266	A (6)	B (3)		F			A	
215KB	E		A1			A	52266	A (6)	B (3)		F			A	

The following items are common to the above-listed typeforms.

Control Terminal Strip PCB — 48570A.

4-20 mA PCB — 50611A.

Parenthesized are the total quantities per model for the part immediately above the parenthesized quantity only. Toshiba recommends a spare parts inventory of 2 minimum for the parts listed. If the total quantity per unit is 3 or more then the suggested spare parts inventory is one third of the total unit quantity (2 minimum).

Table 25. 460 Volt 1.0 – 350 HP Spare Parts Listing.

MODEL NUMBER	INPUT FUSE	CONTROL FUSE	DC BUS FUSE		CONTACTOR		FAN		RESISTOR	XSISTORS		RECT.	MAIN CAPS	MOV	
VT130G7U	R, S, and T	FU1 (A)	FU2 (A)	FU3 (A) (B) (C)	MS1	MS2	FAN1	FAN 2/3	R21 (A) / (B)	IGM	IGBT7	RECT.	CAP	MOV1	MOV (2) (3)
4015B	N/A	N/A	48762	N/A	49648C	N/A	50037	N/A	56220F						
4025B									56220G						
4035B									56220H						
4055B			00621						56220K						
4080B			50830		49648D				56221B						
4110B								51088	56221C						
4160B			02424		45678		46023	N/A	00388	55626	*	45237	30560 (2)	49047	N/A
4220B			00629							56344	49037	45238	34835 (2)		
4270B									00388 (2)				48019 (2)		
4330B			03250							54969		45239	45182 (2)		
4400B													50855 (2)		
4500B		37160 (2)	00625		42338		44362		35489	56193 (3)		46465	30536 (6)		
4600B			00626		42337					47969 (3)	52806	46466	30560 (6)		
4750B					42338								34835 (6)		
410KB			00628		42767			32028		47970 (3)		45241 (6)	48020 (6)	30965	03672 (2)
412KB	46112 (3)		44272 (2)		42768		48718		30624 (2)	50000 (3)	32207	45242 (6)	48019 (8)	55318 (3)	N/A
415KB	43855 (3)		43855 (2)						30634 (2)		33785		U8020 (8)		
420KB	39659 (3)	39660 (2)	37578 (2)		51973	37698	54140	00226	35489 (2) /53747	50000 (6)	47235			30965	03672 (2)
425KB	37576 (3)				51958							45241 (12)	37568 (6)		
430KB	37578 (3)						55383	00226/ 00224				45242 (12)	37568 (8)	52754	3670 (2)
435KB			N/A	42141 (4)			37693	00226	37580 (18)	37565 (18)	37565	43919 (3)			

*Contained within the IGM module.

The following item is common to the above-listed typeforms.

EOI — 49012

Parenthesized are the total quantities per model for the part immediately above the parenthesized quantity only. Toshiba recommends a spare parts inventory of 2 minimum for the parts listed. If the total quantity per unit is 3 or more then the suggested spare parts inventory is one third of the total unit quantity (2 minimum).

Table 26. 460 Volt 1.0 – 350 HP **PCB** Spare Parts Listing.

MODEL NUMBER	PCB Part Numbers																		
	34499	38383	44292	44293	48605	48776	49648	50001	51389	51507	52266 (Assy)	53288	53300	53390	56000	56220	56221	56222	56223
VT130G7U	A, B, C, etc. is the PCB Typeform.																		
4015B							C								A	F			
4025B							C								A	G			
4035B							C								A	H			
4055B							C								A	K			
4080B							D								A		B		
4110B							D								A		C		
4160B					E										A				C
4220B					F										A				D
4270B					G										A				D
4330B					H										A				D
4400B					J										A				D
4500B						B			A		52266				A			G	
4600B						B				B	52266			A (3)	A			C	
4750B						B				B	52266			A (3)	A			C	
410KB						B				B	52266			A (3)	A			E	
412KB	D					B				B	52266	A (3)	A (3)		F			E	
415KB	D					B				B	52266	A (3)	A (3)		F			F	
420KB	E					B				B	52266	A (6)	B (3)		F			G	
425KB	E					B				B	52266	A (6)	B (3)		F			G	
430KB	E					B				B	52266	A (6)	B (3)		F			G	
435KB	E	A (6)	A (3)	A (3)		B		H			52266				F			G	

The following items are common to the above-listed typeforms.

Control Terminal Strip PCB — 48570A.

4-20 mA PCB — 50611A.

Parenthesized are the total quantities per model for the part immediately above the parenthesized quantity only. Toshiba recommends a spare parts inventory of 2 minimum for the parts listed. If the total quantity per unit is 3 or more then the suggested spare parts inventory is one third of the total unit quantity (2 minimum).

Table 27. 600 Volt 1.0 – 300 HP Spare Parts Listing.

<table>
<tr><th>MODEL NUMBER</th><th>INPUT FUSE</th><th>CONTROL FUSE</th><th>DC BUS FUSE</th><th colspan="2">CONTACTOR</th><th colspan="2">FAN</th><th>RESISTOR</th><th>RECT.</th><th colspan="2">MOV</th><th colspan="2">XSISTORS</th><th>MAIN CAPS</th></tr>
<tr><th>VT130G7U</th><th>R, S, and T</th><th>FU1 (A)</th><th>FU2</th><th>MS1</th><th>MS2</th><th>FAN1</th><th>FAN2/3</th><th>R21 (A) (B)/R22</th><th>RECT.</th><th>MOV1</th><th>MOV (2) (3)</th><th>IGBT7(A)</th><th>IGM</th><th>CAP</th></tr>
<tr><td>6015B</td><td rowspan="13">N/A</td><td rowspan="12">N/A</td><td rowspan="5">49110</td><td rowspan="4">49648F</td><td rowspan="13">N/A</td><td rowspan="5">50037</td><td rowspan="4">N/A</td><td rowspan="5">49648F</td><td colspan="5">56220L</td></tr>
<tr><td>6025B</td><td colspan="5">56220M</td></tr>
<tr><td>6035B</td><td colspan="5">56220N</td></tr>
<tr><td>6060B</td><td colspan="5">56220P</td></tr>
<tr><td>6080B</td><td rowspan="2">51088</td><td colspan="5">56221D</td></tr>
<tr><td>6120B</td><td rowspan="2">49648G</td><td rowspan="2">49648G</td><td colspan="5">56221E</td></tr>
<tr><td>6160B</td><td>49660</td><td>51264</td><td>45237</td><td>32144 (3)</td><td rowspan="8">N/A</td><td colspan="2">56221F</td><td>50333 (4)</td></tr>
<tr><td>6220B</td><td rowspan="2">56353</td><td rowspan="2">32143</td><td rowspan="4">46023</td><td rowspan="8">N/A</td><td rowspan="4">00388 (2)</td><td>45237</td><td rowspan="7">49055</td><td colspan="2">55626</td><td>47973 (2)</td></tr>
<tr><td>6270B</td><td rowspan="5">49037</td><td>56344</td><td>48023 (2)</td></tr>
<tr><td>6330B</td><td>56352</td><td rowspan="3">32143 (2)</td><td rowspan="2">45238</td><td rowspan="4">54969</td><td>49114 (2)</td></tr>
<tr><td>6400B</td><td>56351</td><td>49115 (2)</td></tr>
<tr><td>6500B</td><td>56350</td><td>45239</td><td>49116 (2)</td></tr>
<tr><td>6600B</td><td rowspan="8">37164 (2)</td><td rowspan="2">45479</td><td rowspan="2">42337</td><td rowspan="2">44362</td><td rowspan="2">35489</td><td rowspan="2">46465</td><td>56193 (3)</td><td>47974 (6)</td></tr>
<tr><td>6750B</td><td>47969 (3)</td><td>48023 (6)</td></tr>
<tr><td>610KB</td><td rowspan="2">100620 (3)</td><td rowspan="2">45520</td><td rowspan="3">42768</td><td rowspan="3">56191</td><td rowspan="3">32028</td><td rowspan="3">30634 (2)</td><td rowspan="3">45242 (6)</td><td rowspan="8">32911</td><td rowspan="3">55524 (2)</td><td rowspan="8">55468</td><td rowspan="3">49999 (3)</td><td rowspan="2">48019 (9)</td></tr>
<tr><td>612KB</td></tr>
<tr><td>615KB</td><td>46112 (3)</td><td>45480</td><td>48020 (9)</td></tr>
<tr><td>620KB</td><td>39714 (3)</td><td rowspan="3">50518 (2)</td><td>51973</td><td rowspan="3">37698</td><td rowspan="3">54140</td><td rowspan="2">00226</td><td rowspan="3">35489 (2) /53747</td><td>45241 (6)</td><td rowspan="5">32910 (2)</td><td rowspan="5">49999 (6)</td><td>45182 (9)</td></tr>
<tr><td>625KB</td><td rowspan="2">39659 (3)</td><td rowspan="2">51958</td><td rowspan="2">45242 (6)</td><td>50855 (9)</td></tr>
<tr><td>630KB</td><td>00226/ 00224</td><td>37568 (9)</td></tr>
</table>

*Contained within the IGM module.

The following item is common to the above-listed typeforms.

EOI — 49012

Parenthesized are the total quantities per model for the part immediately above the parenthesized quantity only. Toshiba recommends a spare parts inventory of 2 minimum for the parts listed. If the total quantity per unit is 3 or more then the suggested spare parts inventory is one third of the total unit quantity (2 minimum).

Table 28. 600 Volt 1.0 – 300 HP **PCB** Spare Parts Listing.

MODEL NUMBER	PCB Part Numbers													
	34499	42180	48776	51507	51580	52266	53288	53300	53390	55455	56000	56220	56221	56222
VT130G7U	A, B, C, etc. is the PCB Typeform.													
6015B											A	L		
6025B											A	M		
6035B											A	N		
6060B											A	P		
6080B											A		D	
6120B											A		E	
6160B											A		F	
6220B		Q	C							A	A			J
6270B		R	C	A						A	A			J
6330B		U	C	A						A	A			J
6400B		V	C	A						A	A			J
6500B		W	C	A						A	A			J
6600B			C	B		52266			A (3)		A			K
6750B			C	B		52266			A (3)		A			K
610KB	D		A	B	B	52266	A (3)	A (3)			A			K
612KB	D		A	B	B	52266	A (3)	A (3)			F			K
615KB	D		A	B	B	52266	A (3)	A (3)			F			K
620KB	E		A	B	B	52266	A (6)	B (3)			F			L
625KB	E		A	B	B	52266	A (6)	B (3)			F			L
630KB	E		A	B	B	52266	A (6)	B (3)			F			L

The following items are common to the above-listed typeforms.

Control Terminal Strip PCB — 48570A.

4-20 mA PCB — 50611A.

Parenthesized are the total quantities per model for the part immediately above the parenthesized quantity only. Toshiba recommends a spare parts inventory of 2 minimum for the parts listed. If the total quantity per unit is 3 or more then the suggested spare parts inventory is one third of the total unit quantity (2 minimum).

Index

Numerics

0 Hz Command Function, 106
0 Hz Dead Band Signal, 105
12-pulse operation, 20

A

Abnormal Speed Detection Filter Time, 158
Abnormal Speed Settings, 52
Acc/Dec Base Frequency Adjustment, 161
Acc/Dec Group, 142
Acc/Dec Switching Frequency #1, 142
Accel #1 Time, 63
Accel #2 Time, 140
Accel #3 Time, 143
Accel #4 Time, 144
Accel/Decel #1 – #4 Settings, 57
Accel/Decel #1 Settings, 47
Accel/Decel Lower Limit Time, 143
Accel/Decel Pattern #1, 141
Accel/Decel Pattern #2, 142
Accel/Decel Pattern #3, 143
Accel/Decel Pattern #4, 144
Accel/Decel Settings, 57
Accel/Decel Special, 57
Accel/Decel Special Display Resolution, 165
Accel/Decel Switching Frequency #2, 143
Accel/Decel Switching Frequency #3, 144
Acceleration, 63
Acceleration Time Adjustment, 161
Adjust Accel/Decel Automatically, 41
Alarm Popups, 47
Alarms, 174
AM, 22, 24, 56
AM Terminal Adjustment, 163
AM Terminal Assignment, 163
AM, FM, FP, and Analog 1&2 settings, 61
Analog, 163
Analog 1 Terminal Adjustment, 163
Analog 1 Terminal Setting, 163
Analog 2 Terminal Adjustment, 164
Analog 2 Terminal Setting, 163
Analog Filter, 50
Analog Input Filter, 94
Analog Input Functions, 49
Analog1, 56
Analog2, 56
ASD – Multicom Option Boards, 200
ASD Capacity, 16
ASD Control, 26
ASD Number, 168
ASD Overload, 176
ASD7-SIM2, 200
ASD-BPC, 200
ASD-CAB-PC, 200
ASD-CONDUIT-1, 200
ASD-EOI-N4, 200
ASD-FUSEKIT-12P, 20
ASD-ISO-1, 200
ASD-MTG-KIT, 200
ASD-NANOCOM, 26
ASD-side Switching Wait Time, 120
ASD-SS, 200
ASD-TB1-AC1, 200
At-Frequency Powerline Switching, 120
Atn, 176
At-trip Recorded Parameters, 180
Automatic Accel/Decel #1, 59
Autotune Error, 176
Autotuning, 13

B

Backlash Setup, 57
Base Frequency Volts, 52
Bezel Mounting Dimensions, 192
Bezel Mounting Hardware, 190
BIN Speed Reference Setpoint #1 (%), 101
BIN Speed Reference Setpoint #1 (frequency), 102
BIN Speed Reference Setpoint #2 (%), 102
BIN Speed Reference Setpoint #2 (frequency), 102
BIN Torque Reference Setpoint #1 (%), 102
BIN Torque Reference Setpoint #2 (%), 103
Brake Fault Internal Timer, 159
Brake Fault Timer, 52
Break/Make Start, 111

C

Cable/Terminal Specifications, 195
Carrier Frequency, 57, 111
CC, 22, 24
CE compliance, 182
CE Compliance Requirements, 10
Changed from Default, 47
Changed From Default screen, 39
Circuit breaker configuration, 18
Clearing a Trip, 181

CM1, 174
CM2, 174
CN3 Pinout, 27
CN7 Pinout, 28
CNU1/1A and CNU2/2A Pinout, 27
CNU2/2A Pinout, 27
Command Control Selections, 34
Command Mode Selection, 59
Command Source, 42
Commercial Power Switching Frequency Hold Time, 121
Commercial Power Wait Time, 120
Common Serial (TTL), 26
Communication Baud Rate (logic), 167
Communication Error, 55, 172, 176
Communication Internal, 169
Communication Reference Adjust, 55
Communication Setting Parameters, 54
Communication Settings, 54
Communications Reference Setpoint #1 (%), 170
Communications Reference Setpoint #2 (%), 171
Communications Speed Setpoint #1 (frequency), 171
Communications Speed Setpoint #2 (frequency), 171
Compensation Coefficient for Iron Loss, 139
concerns about this publication, 4
Conduit Extender Box, 189
Conduit Extender Box Installation, 189
Conduit Plate Information, 182, 187
Configuration and Menu Options, 43
Connecting the ASD, 19
Connection Diagram, 30
Constant Vector Control, 138
Continued Stall Until Trip During Power Operation, 135
continuous splash screen, 27
Contrast (adjustment), 47
Control, 26
Control Board, 26
Control Power Undervoltage, 177
Control Terminal Strip, 22
CPU Fault, 177
Crane/Hoist Load, 57
Cumulative Run Timer, 52
Cumulative Run Timer Alarm Setting, 158
Current Control Integral Gain, 124
Current Control Proportional Gain, 123
Current Differential Gain, 135
Current Vector Control, 138
Current/Voltage Specifications, 193
Custom V/f Five-Point Setting #1 Frequency, 89
Custom V/f Five-Point Setting #1 Voltage, 89
Custom V/f Five-Point Setting #2 Frequency, 89
Custom V/f Five-Point Setting #2 Voltage, 89
Custom V/f Five-Point Setting #3 Frequency, 90
Custom V/f Five-Point Setting #3 Voltage, 90
Custom V/f Five-Point Setting #4 Frequency, 90
Custom V/f Five-Point Setting #4 Voltage, 90
Custom V/f Five-Point Setting #5 Frequency, 90
Custom V/f Five-Point Setting #5 Voltage, 90

D

Date and time setting, 47
dbOn, 176
DC Braking, 51
DC Bus Undervoltage, 177
DC Fuse Open, 177
DC Injection Braking Current, 105
DC Injection Braking Start Frequency, 105
DC Injection Braking Time, 106
DCL Selection Table, 199
Dead Time Compensation, 58
Dead Time Compensation (Enable), 139
Dead-time Compensation Bias, 139
Decel #1 Time, 63
Decel #2 Time, 140
Decel #3 Time, 143
Decel #4 Time, 144
Deceleration Time Adjustment, 161
Default Setting Changes, 39
Default Term. Setting, 22
Derate Threshold frequency, 111
Direct Access, 47
Direct Access Parameter Information, 59
Direct Access Parameters/Numbers, 59
Direction (of motor rotation), 62
Discrete Input, 22
Discrete Input Terminal Assignment, 76
Discrete Output, 22
Display Units, 48
Display Units for Voltage and Current, 164
Disposal, 4
Down Key, 36
Drive Characteristics, 16
Driving Torque Limit #1, 133
Driving Torque Limit #2, 133
Driving Torque Limit #3, 134
Driving Torque Limit #4, 134
Drooping, 115
Drooping Control, 54
Drooping Gain, 115
Drooping Insensitive Torque Range, 116
Drooping Output Filter, 116
Drooping Reference, 117
Dynamic Braking, 51, 112
Dynamic Braking Enable, 112
Dynamic Braking Resistor Overcurrent, 177
Dynamic Braking Resistor Overload, 177

E

Earth Fault, 177
Earth Fault Alarm Level, 160
Earth Fault Alarm Time, 160
Earth Fault Trip Level, 160
Earth Fault Trip Time, 160
EEPROM Data Fault, 177
EEPROM Fault, 177
Electronic Gear Setting, 123
Electronic Operator Interface, 36
Electronic Thermal Protection #1, 154
Electronic Thermal Protection #2, 86
Electronic Thermal Protection #3, 87
Electronic Thermal Protection #4, 88
Emergency Off, 177
Emergency Off DC Injection Application Time, 155
Emergency Off Mode Settings, 154
Emergency Off Setting, 51
EMG, 174
Enclosure Dimensions/Weight, 182
Encoder, 200
Encoder Action, 47
Encoder Loss, 177
End Frequency, 105
Enter Key, 36
EOI Bezel Mounting Dimensions, 192
EOI Bezel Plate Dimensions (mounting), 192
EOI Features, 36
EOI Installation Precautions, 191
EOI Operation, 37
EOI Remote Mounting, 190
EOI Remote Mounting using the ASD-MTG-KIT, 192
EOI Remote Mounting w/o the ASD-MTG-KIT, 191
EOI Setup Options, 47
Equipment Inspection, 3
Escape Key, 36
Excitation Starting Rate, 138
Exciting Strengthening Coefficient, 137
Extended Terminal Function, 70
Extender Cables, 190

F

F, 22, 23
F Input Terminal Assignment, 71
F Input Terminal Delay, 80
Fan Control, 52, 157
Fault, 173
Fault Status, 46
Faults, 173
Feedback in Panel Mode, 166
Feedback Parameters, 53, 54
Feedback Settings, 53
Feedback Settings Differential (D) Gain, 122
Feedback Source, 121
Feedback Source Delay Filter, 121
Ferraz Shawmut Semiconductor fuse, 20
FH, 63
Filter Selection Table, 11
FL Off Delay, 84
FL On Delay, 83
FL Output Terminal Assignment, 79
FLA, 22, 24
FLA, B, and C switching relationship, 24
Flash Memory Fault, 177
FLB, 22, 24
FLC, 22, 24
FM, 22, 24, 56
FM Terminal Adjustment, 60
FM Terminal Assignment, 60
Forward Speed Limit Input, 131
Forward Speed Limit Level, 131
FP, 22, 24
FP Terminal Adjustment, 164
FP Terminal Setting, 164
FP Terminal Settings, 49
Frequency Control, 57
Frequency Control Selections, 35
Frequency Display Resolution, 164
Frequency for Automatic High-Speed Operation at Light-Load, 119
Frequency Limit at Position, 123
Frequency Mode #1, 60
Frequency Mode #2, 47, 94
Frequency Override Additive Input, 162
Frequency Override Multiplying Input, 162
Frequency Point Selection, 170
Frequency Reference Source, 42
Frequency Set Mode, 43
Frequency Setting, 47
Frequency Setting Parameters, 50
Fundamental Parameters, 47
Fwd/Rev Disable, 51

G

G7 ASD Control, 26
G7 ASD Spare Parts Listing, 201
G7 Optional Devices, 200
G7 Part Numbering Convention, 182
Gate Array Fault, 177
General Safety Information, 1
Group #1 Speed #1, 146
Group #1 Speed #2, 146
Group #1 Speed #3, 146

Group #1 Speed #4, 146
Group #1 Speed #5, 146
Group #1 Speed #6, 146
Group #1 Speed #7, 146
Group #1 Speed #8, 147
Group #1 Speed Repeat Factor, 146
Group #2 Speed #1, 147
Group #2 Speed #2, 147
Group #2 Speed #3, 147
Group #2 Speed #4, 147
Group #2 Speed #5, 147
Group #2 Speed #6, 147
Group #2 Speed #7, 147
Group #2 Speed #8, 147
Group #2 Speed Repeat Factor, 147
Group #3 Speed #1, 148
Group #3 Speed #2, 148
Group #3 Speed #3, 148
Group #3 Speed #4, 148
Group #3 Speed #5, 148
Group #3 Speed #6, 148
Group #3 Speed #7, 148
Group #3 Speed #8, 148
Group #3 Speed Repeat Factor, 148
Group #4 Speed #1, 149
Group #4 Speed #2, 149
Group #4 Speed #3, 149
Group #4 Speed #4, 149
Group #4 Speed #5, 149
Group #4 Speed #6, 149
Group #4 Speed #7, 149
Group #4 Speed #8, 149
Group #4 Speed Repeat Factor, 148

H

Handling and Storage, 4
Heavy-Load Torque During Forward Acceleration, 118
Heavy-Load Torque During Forward Deceleration, 119
Heavy-Load Torque During Reverse Acceleration, 119
Heavy-Load Torque During Reverse Deceleration, 119
Hz Per User-defined Unit, 164

I

I/O and Control, 22
I/O Circuit Configurations, 29
ICCDESIGNS, 26
II, 22, 24
Initial Setup, 38
Input Phase Loss, 177
Input Special Functions, 49
Input Terminal Assignment, 49
Input Terminal Delays, 50
Input Terminal Priority, 70
Inrush Current Suppression, 155
Installation and Connections, 17
Installation Notes, 17
Installation Precautions, 4
Integral (I) Gain, 121
Interlock with ST, 155

J

Jog Run Frequency, 107
Jog Settings, 50
Jog Stop Control, 108
Jump Frequencies, 57
Jump Frequency #1, 108
Jump Frequency #1 Bandwidth, 108
Jump Frequency #2, 108
Jump Frequency #2 Bandwidth, 108
Jump Frequency #3, 109
Jump Frequency #3 Bandwidth, 109
Jump Frequency Processing, 109

L

L1/R, 19
L2/S, 19
L3/T, 19
LCD Display, 36
LCD EOI Operation, 42
LCD Port Connection, 55
Lead Length Specifications, 21
LED Option Override Multiplication Gain, 166
Light Load Conditions, 14
Light-Load High-Speed Operation Heavy-Load Detection Time, 118
Light-Load High-Speed Operation Load Detection Time, 118
Light-Load High-Speed Operation Load Wait Time, 118
Light-load High-speed Operation Selection, 117
Light-Load High-Speed Operation Switching Lower-Limit Frequency, 117
Line Power Switching, 49, 50
Link Reactor Information, 199
Load Drooping, 177
Load End Short Circuit, 177
Load Inertia (Acc/Dec Torque), 116
Load Sharing Gain Input, 130
Load Torque Filter (Acc/Dec Torque), 116
Load-produced Negative Torque, 15
Local Remote Key, 47
Local|Remote Key, 36
Lockout, 48

LOD Boost Time, 167
LOD Control and Stopping Method, 166
LOD Feedback Level (Hz), 167
LOD Restart Delay Time, 167
LOD Setpoint Boost (Hz), 167
LOD Start Level (Hz), 166
LOD Start Time, 167
Low Current, 177
Low Current Settings, 52
Low Current Trip, 156
Low Current Trip Threshold, 156
Low Current Trip Threshold Time, 156
Low Output Disable, 166
Low Speed Operation, 13
Low Speed Signal Output Frequency, 67
Lower Deviation Limits, 122
Lower Limit Frequency, 40, 64

M

Main Board EEPROM Fault, 177
Manual Torque Limit Settings, 53
maximum Carrier Frequency, 111
Maximum Frequency, 63
Meter Terminal Adjustment Parameters, 56
Mode #1/#2 Switching Frequency, 94
MOFF, 174
MON/PRG, 37
Monitor Mode, 45
Monitor Setup, 56
MOP acceleration rate, 77
MOP deceleration rate, 77
Motor #1 Base Frequency, 64
Motor #1 Max Output Voltage, 113
Motor #1 Torque Boost, 65
Motor #2 Base Frequency, 85
Motor #2 Max Output Voltage, 86
Motor #2 Torque Boost, 86
Motor #3 Base Frequency, 86
Motor #3 Max Output Voltage, 87
Motor #3 Torque Boost, 87
Motor #4 Base Frequency, 87
Motor #4 Max Output Voltage, 88
Motor #4 Torque Boost, 88
Motor 150% OL Time Limit, 155
Motor Braking, 15
Motor Capacity, 129
Motor Characteristics, 13
Motor connection diagram, 20
Motor Constant 1 (primary resistance), 128
Motor Constant 2 (secondary resistance), 128
Motor Constant 3 (exciting inductance), 128
Motor Constant 3 Enable, 129
Motor Constant 4 (load inertia), 128
Motor Constant 5 (leakage inductance), 128
Motor Counter Data, 124
Motor Current Rating, 41
Motor Overload, 178
Motor Overload Trip, 52
Motor Parameters, 56
Motor Set #1, 47, 56
Motor Set #2, 56
Motor Set #3, 56
Motor Set #4, 56
Motor Settings, 56
Motor Shaft Fixing Control, 106
Motor Shaft Stationary Control, 106
Motor Type, 129
Motor/Load Combinations, 14
Motorized Pot Frequency at Power Down, 71
Motorized Pot Settings, 51
Mounting the ASD, 18
MS1 AUX, 17

N

Number of PG Input Pulses, 122
Number of Poles of Motor, 128
Number of Retries, 112

O

OC, 174
OH, 174
OJ, 174
OL Reduction Starting Frequency, 155
OLI, 175
OLM, 175
OLR, 175
ON Input Terminal Assignment, 71
On-Trip Powerline Switching, 120
OP, 175
Operation (Local), 38
Operation Above 60 Hz, 14
Operational and Maintenance Precautions, 8
Option Fault, 178
Option Type, 46
Options, 200
OT, 175
OUT1, 22, 24
OUT1 Off Delay, 84
OUT1 On Delay, 83
Out1 Out2 FL, 45
OUT1 Output Terminal Assignment, 79
OUT2, 22, 24

OUT2 Off Delay, 84
OUT2 On Delay, 83
OUT2 Output Terminal Assignment, 79
OUT4 Off Delay, 85
OUT4 On Delay, 83
OUT5 Off Delay, 85
OUT5 On Delay, 83
OUT6 Off Delay, 85
OUT6 On Delay, 84
OUT7 Off Delay, 85
OUT7 On Delay, 84
Output #4 Terminal Assignment, 79
Output #5 Terminal Assignment, 80
Output #6 Terminal Assignment, 80
Output #7 Terminal Assignment, 80
Output Current Protection Fault, 178
Output Phase Loss, 178
Output Phase Loss Detection, 155
Output Terminal Assignments, 81
Output Terminal Delays, 50
Output Terminal Functions, 49
Output terminal selections, 61
Over Exciting Cooperation, 138
Over Speed, 179
Overcurrent During Acceleration, 178
Overcurrent During Deceleration, 178
Overcurrent During Run, 178
Over-current Protection, 16
Overcurrent Stall Level, 154
Overheat, 179
Overload, 52
Overload Protection, 13
Override Control, 54
Overspeed Detection Frequency Range, 158
Overtorque, 179
Overtorque Detection Time, 157
Overtorque Settings, 52
Overtorque Trip, 157
Overtorque Trip/Alarm Level (Negative Torque), 157
Overtorque Trip/Alarm Level (Positive Torque), 157
Overvoltage During Acceleration, 179
Overvoltage During Deceleration, 179
Overvoltage During Run, 179
Over-voltage Stall, 113
Overvoltage Stall Level, 159
Overvoltage Stall Level (fast), 158

P

P24, 22, 24
PA, 20, 112
Panel Menu, 44
Parity, 168
Pattern #1 Characteristics (Pattern Run), 149
Pattern #10 Characteristics (Pattern Run), 150
Pattern #11 Characteristics (Pattern Run), 150
Pattern #12 Characteristics (Pattern Run), 151
Pattern #13 Characteristics (Pattern Run), 151
Pattern #14 Characteristics (Pattern Run), 151
Pattern #15 Characteristics (Pattern Run), 151
Pattern #2 Characteristics (Pattern Run), 150
Pattern #3 Characteristics (Pattern Run), 150
Pattern #4 Characteristics (Pattern Run), 150
Pattern #5 Characteristics (Pattern Run), 150
Pattern #6 Characteristics (Pattern Run), 150
Pattern #7 Characteristics (Pattern Run), 150
Pattern #8 Characteristics (Pattern Run), 150
Pattern #9 Characteristics (Pattern Run), 150
Pattern Run, 54, 145
Pattern Run #1 Run-Time Setting, 151
Pattern Run #10 Run-Time Setting, 152
Pattern Run #11 Run-Time Setting, 153
Pattern Run #12 Run-Time Setting, 153
Pattern Run #13 Run-Time Setting, 153
Pattern Run #14 Run-Time Setting, 153
Pattern Run #15 Run-Time Setting, 153
Pattern Run #2 Continuation Mode Run-Time Setting, 151
Pattern Run #3 Run-Time Setting, 151
Pattern Run #4 Run-Time Setting, 151
Pattern Run #5 Run-Time Setting, 152
Pattern Run #6 Run-Time Setting, 152
Pattern Run #7 Run-Time Setting, 152
Pattern Run #8 Run-Time Setting, 152
Pattern Run #9 Run-Time Setting, 152
Pattern Run Control Parameters, 54
Pattern Run Description, 145
Pattern Run Setup, 145
PB, 112
PG Disconnect Detection, 122
PG Input Phases, 122
PG Settings, 53
PG Speed Reference Setpoint #1 (%), 103
PG Speed Reference Setpoint #1 (frequency), 104
PG Speed Reference Setpoint #2 (%), 104
PG Speed Reference Setpoint #2 (frequency), 104
PG Type/Connection Error, 179
Phantom Fault, 179
Phase Loss, 52
phase-shifting transformer, 20
PID feedback, 121, 166
PO, 20
POFF, 175
Position Completion Range, 123
Position Deviation Error, 179
Position Difference Limit (Droop Pulses Allowed), 160
Position Loop Gain, 123

Power Connections, 19
Power Factor Correction, 14
Power Running Torque Limit #1, 133
PP, 22, 24
Preferences, 47
Preset Speed #1, 66
Preset Speed #10, 110
Preset Speed #11, 110
Preset Speed #12, 110
Preset Speed #13, 110
Preset Speed #14, 110
Preset Speed #15, 110
Preset Speed #2, 66
Preset Speed #3, 67
Preset Speed #4, 67
Preset Speed #5, 67
Preset Speed #6, 67
Preset Speed #7, 67
Preset Speed #8, 109
Preset Speed #9, 109
Preset Speed Direction #1, 125
Preset Speed Direction #10, 126
Preset Speed Direction #11, 126
Preset Speed Direction #12, 127
Preset Speed Direction #13, 127
Preset Speed Direction #14, 127
Preset Speed Direction #15, 127
Preset Speed Direction #2, 125
Preset Speed Direction #3, 125
Preset Speed Direction #4, 125
Preset Speed Direction #5, 125
Preset Speed Direction #6, 126
Preset Speed Direction #7, 126
Preset Speed Direction #8, 126
Preset Speed Direction #9, 126
Preset Speed Mode, 51, 54
Preset Speeds, 50, 54
Program Menu Navigation, 47
Program Mode, 47
Prohibit Initializing User Parameters During Typeform Initialization, 165
Proportional (P) Gain, 121
Proportional-Integral-Derivative (PID), 121
Protection Parameters, 51, 52
PtSt, 175
Pulse Width Modulation, 13
PWM Carrier Frequency, 111

Q

Qualified Personnel, 3

R

R, 22, 23
R Input Terminal Assignment, 71
R Input Terminal Delay, 82
R/F Priority Selection, 69
RAM Fault, 179
Reach Settings, 49
Real Time Clock, 200
Realtime Clock Setup, 47
Reference Priority Selection, 91
Regeneration Torque Limit #1, 133
Regeneration Torque Limit #2, 134
Regeneration Torque Limit #3, 134
Regeneration Torque Limit #4, 134
Regeneration Torque Limit Setting #1, 133
Release After Run Timer (brake), 160
Remote EOI Required Hardware, 190
RES, 22, 23
RES Input Terminal Assignment, 72
RES Input Terminal Delay, 82
Reset, 62
Retry/Restart Configuration, 51
Reverse Speed Limit Input, 131
Reverse Speed Limit Level, 131
Review Startup Screen, 48
Ridethrough Mode, 112
ROM Fault, 179
Root menu mapping, 43
Root Menus, 43
Rotary Encoder, 37
RR, 22, 23
RR Bias Adjust, 136
RR Gain Adjust, 136
RR Speed Reference Setpoint #1 (%), 95
RR Speed Reference Setpoint #1 (frequency), 95
RR Speed Reference Setpoint #2 (%), 96
RR Speed Reference Setpoint #2 (frequency), 96
RR Torque Reference Setpoint #1 (%), 96
RR Torque Reference Setpoint #2 (%), 96
RS232, 26
RS232/RS485 Baud Rate, 171
RS232/RS485 Communications Time Out Time, 168
RS232/RS485 Communications Time-Out Action, 169
RS232/RS485 Master Output, 172
RS232/RS485 Response Delay Time, 172
RS232/RS485 Wire Count, 172
RS485, 26
Run Frequency, 104
Run Frequency Hysteresis, 105
Run Key, 36
RX, 22, 23
RX Bias Adjust, 136
RX Gain Adjust, 137

RX Speed Reference Setpoint #1 (%), 97
RX Speed Reference Setpoint #1 (frequency), 97
RX Speed Reference Setpoint #2 (%), 98
RX Speed Reference Setpoint #2 (frequency), 98
RX Torque Reference Setpoint #1 (%), 98
RX Torque Reference Setpoint #2 (%), 98
RX2 Bias Adjust, 137
RX2 Gain Adjust, 137
RX2 Speed Reference Setpoint #1 (%), 99
RX2 Speed Reference Setpoint #1 (frequency), 99
RX2 Speed Reference Setpoint #2 (%), 100
RX2 Speed Reference Setpoint #2 (frequency), 100
RX2 Torque Reference Setpoint #1 (%), 100
RX2 Torque Reference Setpoint #2 (%), 100

S

S1, 22, 23
S1 – S4 Input Terminal Delay, 82
S1 Input Terminal Assignment, 72
S2, 22, 23
S2 Input Terminal Assignment, 72
S3, 22, 23
S3 Input Terminal Assignment, 72
S4, 22, 23
S4 Input Terminal Assignment, 73
S5 – S16 Input Terminal Delay, 82
S5 Input Terminal Assignment, 73
S6 Input Terminal Assignment, 73
S7 Input Terminal Assignment, 74
Scrolling Monitor, 43
Scrolling Monitor Select, 57
Service Life Information, 9
Shipping Weight, 182
Shipping Weight (lbs.), 182
Short Circuit Detect Pulse, 52
Short Circuit Test, 156
Short Circuit Test Duration, 156
Sink/Source Setting Error, 179
Soft Stall, 65
Soft Stall Enable, 52
Soft Start, 52
Spare Parts Listing, 201
S-pattern 1, 141
S-pattern 2, 141
S-Pattern Lower Limit Adjustment, 142
S-Pattern Upper Limit Adjustment, 142
Special Control Parameters, 57, 58
Special Parameters, 58
Speed at Drooping Gain 0%, 116
Speed at Drooping Gain 100%, 116
Speed Drop Detection Frequency Range, 158
Speed Limit (torque) Reference, 132
Speed Limit Torque Level, 132
Speed Limit Torque Range, 132
Speed Limit Torque Recovery, 132
Speed Loop Integral Gain, 124
Speed Loop Parameter Ratio, 124
Speed Loop Proportional Gain, 124
Speed Reach Frequency, 68
Speed Reach Frequency Tolerance, 68
Speed Ref. Setpoint, 50
Speeds, 54
splash screen display, 27
ST, 22, 23
ST Input Terminal Assignment, 72
ST Input Terminal Delay, 82
ST Signal Selection, 69
ST1, 17
Stall, 51
Stall Cooperation Gain at Field Weakening Zone, 138
Stall Prevention During Regeneration, 135
Standard Mode Settings, 47
Startup and Test, 21
Startup Frequency, 104
Startup Wizard, 47
Startup Wizard Requirements, 40
Status LED, 36
Stop Key, 36
Stop Pattern, 165
SW1, 25
SW2, 25
Switching Frequency of Current/Voltage Control, 139
Switching Load Torque During Forward-Run, 118
Switching Load Torque During Reverse-Run, 119
Synchronized Torque Bias Input, 130
System Grounding, 19
System Integration Precautions, 7
System Operation, 38

T

T1/U, 19
T2/V, 19
T3/W, 19
Tension, 130
Tension Torque Bias Input, 130
Terminal Descriptions, 23
Terminal Selection Parameters, 49
Torque Boost Adjustment, 162
Torque Command, 129
Torque Command Filter, 129
Torque Command Mode, 132
Torque Control, 52, 53
Torque Limit Group, 166
Torque Limit Mode, 134

Torque Limit Mode (Speed Dependent), 135
Torque Limit Settings, 53
Torque Proving Fault, 179
Torque Setting Parameters, 52, 53
Torque Speed Limiting, 53
Trip History, 56, 180
Trip Monitor From ASD, 181
Trip Monitor from ASD, 56, 57
Trip Record at Monitor Screen, 181
Trip Save at Power Down Enable, 154
Trip Settings, 52
Trips, 173
Trouble Shooting, 173
TTL Master Output, 169
Type Reset, 48, 62
Typeform Error, 180

U

U Phase Short Circuit, 180
UC, 175
UL 1995, 182
Undervoltage Detection Time, 159
Undervoltage Stall level, 159
Undervoltage Trip, 159
Undervoltage/Ridethrough, 52
Up Key, 36
Upper Deviation Limits, 122
Upper Limit Frequency, 40, 63
Upper Limit Frequency Adjustment, 161
Use Speed Mode, 125
User Notification Codes, 176
User Notification codes, 173
Using Vector Control, 16
Utility Parameters, 48

V

V Phase Short Circuit, 180
V/f Adjustment, 58
V/f Adjustment Coefficient, 88
V/f Five Point Setting, 58
V/f Group, 165
V/f Pattern, 64
Vector Motor Model, 56
Vector Motor Model Autotune Command, 127
Vector Motor Model Slip Frequency Gain, 127
Versions, 48
VI, 22, 24
VI/II Bias Adjust, 135
VI/II Gain Adjust, 136
VI/II Speed Reference Setpoint #1 (%), 92
VI/II Speed Reference Setpoint #1 (frequency), 92
VI/II Speed Reference Setpoint #2 (%), 93
VI/II Speed Reference Setpoint #2 (frequency), 93
VI/II Torque Reference Setpoint #1 (%), 93
VI/II Torque Reference Setpoint #2 (%), 93
Viewing Trip Information, 180
Voltage and Frequency Rating of the Motor, 40
Voltage Compensation Coefficient for Dead Time, 139
Voltage Vector Control, 138
Volts per Hertz Setting, 41

W

W Phase Short Circuit, 180
Warranty Card, 3
Wizard Finish, 42