TOSHIBA

230, 460, and 600 Volt Ratings

OPERATION MANUAL

E3

June, 1998
Part #47341-004

VARIABLE TORQUE
ADJUSTABLE SPEED DRIVE

IMPORTANT NOTICE

The instructions contained in this manual are not intended to cover all details or variations in equipment types, nor to provide for all possible issues concerning the installation, operation, or maintenance of this equipment. Should additional information be desired or should particular problems arise which are not covered sufficiently for the purchaser's purposes, the matter should be referred to the local Toshiba sales office.

The contents of this instruction manual shall not become a part of or modify any prior or existing agreement, commitment, or relationship. The sales contract contains the entire obligation of Toshiba International Corporation's Adjustable Speed Drive Division. The warranty contained in the contract between the parties is the sole warranty of Toshiba International Corporation's Adjustable Speed Drive Division and any statements contained herein do not create new warranties or modify the existing warranty.

Toshiba International Corporation reserves the right, without prior notice, to update information, make product changes, or to discontinue any product or service identified in this publication.

Any electrical or mechanical modification to this equipment, without prior written consent of Toshiba International Corporation will void all warranties and may result in a safety hazard in addition to voiding the UL listing.

AC ADJUSTABLE SPEED DRIVE

Please complete the Extended Warranty Card supplied with this inverter and return it by prepaid mail to Toshiba. This activates the extended warranty. If additional information or technical assistance is required, call Toshiba's marketing department toll free at (800) 231-1412 or write to: Toshiba International Corporation, 13131 W. Little York Road, Houston, TX 77041-9990.

For your records, complete the following information about the drive with which this manual was shipped.

E3 Model Number: _____

E3 Serial Number: _____

Date of Installation: _____

Inspected By: _____

Name of Application: _____

INTRODUCTION

Thank you for purchasing the E3 adjustable speed drive. This adjustable frequency solid-state AC drive features "True Torque Control" - Toshiba's 'vector algorithm' that enables motors to develop high starting torque and compensates for motor slip. The E3 features a four character 7-segment type LED display with eight other discrete LEDs, RS232 port, dynamic braking transistor and ground fault, overload, and overcurrent protection. These features, combined with built-in special control features such as PID, drooping, trim, and dancer control, make this drive suitable for a wide variety of applications that require unparalleled motor control and reliability.

It is the intent of this operation manual to provide a guide for **safely** installing, operating, and maintaining the drive. This operation manual contains a section of general safety instructions and is marked throughout with warning symbols. **Read this operation manual** thoroughly before installing and operating this electrical equipment.

All safety warnings must be followed to ensure personal safety.

Follow all precautions to attain proper equipment performance and longevity.

We hope that you find this operation manual informative and easy to use. For assistance with your drive, for information on our free drive application school, or for information on Toshiba's complete line of **motors, adjustable speed drives, switchgear, instrumentation, uninterruptible power supplies, PLCs, and motor control products**, please call toll free (800) 231-1412 or write to our plant at: Toshiba International Corporation, 13131 W. Little York Road, Houston, TX 77041-9990.

Again, thank you for your purchase of this product.

COPYRIGHT © [NOVEMBER, 1999] TOSHIBA INTERNATIONAL CORPORATION

GENERAL SAFETY INSTRUCTIONS

Warnings in this manual appear in either of two ways:

1) *Danger warnings* - The danger warning symbol is an exclamation mark enclosed in a triangle which precedes the 3/16" high letters spelling the word "DANGER". The Danger warning symbol is used to indicate situations, locations, and conditions that can cause serious injury or death:

2) *Caution warnings* - The caution warning symbol is an exclamation mark enclosed in a triangle which precedes the 3/16" high letters spelling the word "CAUTION". The Caution warning symbol is used to indicate situations and conditions that can cause operator injury and/or equipment damage:

Other warning symbols may appear along with the *Danger* and *Caution* symbol and are used to specify special hazards. These warnings describe particular areas where special care and/or procedures are required in order to prevent serious injury and possible death:

1) *Electrical warnings* - The electrical warning symbol is a lighting bolt mark enclosed in a triangle. The Electrical warning symbol is used to indicate high voltage locations and conditions that may cause serious injury or death if the proper precautions are not observed:

2) *Explosion warnings* - The explosion warning symbol is an explosion mark enclosed in a triangle. The Explosion warning symbol is used to indicate locations and conditions where molten, exploding parts may cause serious injury or death if the proper precautions are not observed:

For the purpose of this manual and product labels, a **Qualified Person** is one who is familiar with the installation, construction, operation and maintenance of the equipment and the hazards involved (see 1996 NEC (National Electric Code) Article 100 - Definitions).
This person must:

1) Carefully read the entire operation manual (see 1996 NEC Article 110-3 "Installation and Use").

2) Be trained and authorized to safely energize, de-energize, clear faults, ground, lockout and tag circuits and equipment in accordance with established safety practices.

3) Be trained in the proper care and use of protective equipment such as safety shoes, rubber gloves, hard hats, safety glasses, face shields, flash clothing, etc. in accordance with established safety practices.

4) Be trained in rendering first aid.

CONTENTS

PAGE

Disclaimer i

Introduction ii

General Safety Instructions iii

Contents ..... iv-vii

Inspection/Storage/Disposal
Inspection of the New Unit 1-1
Storage 1-1
Disposal 1-1

Inspection and Precautions
Installation Safety Precautions 2-1
Operating Safety Precautions 2-2
Confirmation of Wiring 2-3
Start-up and Test 2-4
Maintenance 2-4

Operating Specifications
230 and 460 Volt NEMA Type 1 Chassis Ratings 3-1
600 Volt NEMA Type 1 Chassis Ratings 3-2
Standard Specifications 3-3

Equipment Wiring
Standard Connection Diagrams 4-1
Model 2035 to 2330 4-1
Model 4055 to 4220 4-2
Model 4270 to 4500 4-3
Model 4600 to 412K & Model 2400 to 2600 4-4
Model 415K to 435K 4-5
Model 6060 to 612K 4-6
Selection of Main Circuit Wiring Equipment and
Standard Cable Sizes 4-7
Grounding 4-9
Motor Selection 4-9

Terminal Connections
Terminal Board 5-1
Control Board 5-2
Terminal Connections and Functions 5-3

CONTENTS (cont'd)

PAGE

Operating Panel
Operating Panel Layout 6-1
LED Display Description 6-1
7-Segment Alphanumerics 6-2
Panel Keys and Functions 6-3

Operating Modes
Mode Summary 7-1
Function Outline 7-1
Standard Monitor Mode 7-1
Frequency monitor function 7-1
Frequency command value setting 7-1
Switching between forward and reverse 7-2
Status Alarms 7-2
Mode Selection Menu 7-3
Setup Mode 7-4
Program Mode 7-6
View user change parameters 7-8
Analog meter adjustment function 7-9
Setting alarm displays 7-9
Panel lockout mode cancellation 7-10
Status monitor mode 7-11
Jog run mode 7-13
Command Instructions 7-14
Operating mode switching 7-14
Run/Stop commands 7-14
Emergency off 7-14
Trip clear command 7-15
Standard setting selections 7-15
Retry 7-16
Damper function 7-16
Fire speed function 7-16
Detailed Message Description 7-17
Status monitor messages 7-17
Inverter trip codes 7-19
Non-trip messages 7-20

Parameter Specifications
Setup Mode 8-1
Setup Mode Parameters 8-1
Program Mode 8-2
Fundamental Parameters #1 8-2

CONTENTS (cont'd)

PAGE

Parameter Specifications
Program Mode (cont'd)
Fundamental Parameters #2 8-3
Panel Control Parameters 8-4
Terminal Selection Parameters 8-5
Special Control Parameters 8-7
Frequency Setting Parameters 8-8
Protection Parameters 8-13
Pattern Run Parameters 8-16
Feedback Parameters 8-22
Communication Setting Parameters 8-24
Industrial Application Parameters (Pump) 8-29
Industrial Application Parameters (Fan) 8-29
Industrial Application Parameters (Cooling Tower) 8-29
AM/FM Terminal Adjustment Parameters 8-30
Utility Parameters 8-31
Motor Parameters 8-35
Standard Monitor Mode 8-36

Parameter Explanations
Setup Mode Parameters 9-1
Fundamental Parameters #1 9-3
Fundamental Parameters #2 9-5
Terminal Selection Parameters 9-7
Input Terminal Functions 9-11
Output Terminal Functions 9-13
Special Control Parameters 9-15
Frequency Setting Parameters 9-17
Protection Parameters 9-20
Pattern Run Parameters 9-25
Feedback Parameters 9-27
Communication Parameters 9-29
AM/FM Adjustment Parameters 9-31
Utility Parameters 9-33
Motor Rating Parameters 9-38
Standard Monitor Mode Display Parameters 9-39

Operation Examples
Connection Examples 10-1
Potentiometer Operation 10-1
4-20 mA Reference Operation 10-2

CONTENTS (cont'd)

PAGE

Operation Examples (cont'd)
Connection Examples (cont'd) 10-1
Keypad Frequency Reference and Remote Stop/Start 10-3
RS232 Port 10-3
0-10 Volt Reference Operation 10-4

Programming Examples 10-5
Programming example 1 10-5
Blinding 10-5
Search function 10-5
Preset speed example 10-6
Trim pot example 10-6
Motor operated pot 10-6
True torque control programming 10-7

Service
Requesting After Sales Service 11-1
Parts Service Life 11-2
Troubleshooting 11-3
How to Clear a Fault 11-3
Drive Fault Displays and Explanations 11-3
Drive Warning Displays and Explanations 11-7
Drive Input and Output terminal information decoding 11-8

Dimensions/Weights
Basic Dimensions ..... 12-1 to 12-3
Shipping Weights 12-4

Index ..... 13-1 to 13-9

Inspection of the New Drive

Upon receipt, inspect the drive for shipping damage. After uncrating:

1) Check the unit for loose, broken, bent or otherwise damaged parts due to shipping.

2) Check to see that the rated capacity and the model number specified on the nameplate conform to the order specifications.

Storage

1) Store in a well ventilated location and preferably in the original carton if the inverter will not be used immediately after purchase.

2) Avoid storage in locations with extreme temperatures, high humidity, dust, or metal particles.

Disposal

Please contact your state environmental agency for details on disposal of electrical components and packaging in your particular area. **Never dispose of electrical components via incineration.**

Installation Safety Precautions **CAUTION**

1) **Always ground the unit to prevent electrical shock and to help reduce electrical noise. A separate ground cable should be run inside the conduit with the input, output, and control power cables (See Grounding page 4-7).**

THE METAL OF CONDUIT IS NOT AN ACCEPTABLE GROUND.

2) **Only qualified personnel should install this equipment (see General Safety Instructions on page iii).**

3) Installation of drive systems should conform as a minimum, to the 1996 NEC *National Electrical Code* Article 110 "Requirements For Electrical Installations", to all all regulations of the *Occupational Safety and Health Administration*, and to any other applicable national, regional or industry codes and standards.

4) Install in a secure and upright position in a well ventilated location that is out of direct sunlight. The ambient temperature should be between -10° C and 40° C.

5) Allow a clearance space of 8 inches (20 cm) for the top and bottom and 2 inches (5 cm) on both sides. For models 4500-440K, the top and bottom clearance can be reduced to 4 inches (10 cm). This space will insure adequate ventilation.
Do not obstruct any of the ventilation openings.

6) Avoid installation in areas where vibration, heat, humidity, dust, fibers, steel particles, explosive mists, gasses or sources of electrical noise are present.

7) Adequate working space and illumination must be provided for adjustment, inspection and maintenance of the drive (see 1996 NEC Article 110-16).

8) A noncombustible insulating floor or mat should be provided in the area immediately surrounding the electrical system where maintenance is required.

9) Use **lockout/tagout** procedures on branch circuit disconnect before drive installation.

10) Connect three phase power of the correct voltage to input terminals L1, L2, L3 (R, S, T) and connect three phase power from output terminals T1, T2, T3 (U, V, W) to a motor of the correct voltage and type for the application. Size the branch circuit conductors in accordance with *Selection of Main Circuit Wiring Equipment and Standard Cable Sizes* Page 4-5.

11) If conductors of a smaller than recommended size are used in parallel to share current then the conductors should be kept together in sets i.e. U1, V1, W1 in one conduit and U2, V2, W2 in another (see 1996 NEC Article 300-20 and Article 310-4). National and local electrical codes should be checked for possible cable derating factors if more than three power conductors are run in the same conduit (see 1996 NEC Article 310 adjustment factors on page 70-196).

12) Install a molded case circuit breaker (MCCB) between the power source and the inverter. Size the MCCB to clear the available fault current of the power source (see 1996 NEC Article 430 Article 102 through Article 111).

Installation Safety Precautions (cont'd) **CAUTION**

13) Use separate metal conduits for routing the input power, output power, and control circuits.

14) If the factory provided door or NEMA 1 enclosure is removed from the drive, then it must be provided with an alternate enclosure before operating. The alternate enclosure should be a minimum of NEMA 1.

15) Do not connect control circuit terminal block return connections marked CC to inverter earth ground terminals marked GND(E). See *Standard Connection Diagrams* page 4-1 and *Terminal Connections and Functions* page 5-3.

16) If a secondary Magnetic Contactor (MC) is used between the inverter output and the load, it should be interlocked so the ST-CC terminals are disconnected before the output contactor is opened. If the output contactor is used for bypass operation, it must also be interlocked so that commercial power is never applied to the inverter output terminals (U,V,W).

17) Power factor improvement capacitors or surge absorbers must not be installed on the inverter's output.

18) The Type 1 enclosed versions of these drives have been additionally evaluated to UL1995, the Standard for Heating and Cooling Equipment, and comply with the applicable requirements for installation in a compartment handling conditioned air.

Operating Safety Precautions **CAUTION**

1) **DANGER** Do not touch any internal part with power applied to the inverter; first remove the power supply from the drive and wait until charge LED (see page 5-1 for location) is no longer illuminated. **Charged capacitors can present a hazard even if source power is removed.**

2) **DO NOT OPERATE THIS UNIT WITH ITS CABINET DOOR OPEN.**

3) Only qualified personnel should have access to the adjustments and operation of this equipment. **They should be familiar with the drive operating instructions and with the machinery being driven.**

4) **Only properly trained and qualified personnel should be allowed to service this equipment. See page iii.**

5) **Follow all warnings and precautions. Do not exceed equipment ratings.**

6) Do not power up the inverter until this entire operation manual is reviewed.

Operating Safety Precautions (cont'd) **CAUTION**

7) The input voltage must be within +/-10% of the specified input voltage. Voltages outside of this permissible tolerance range may cause internal protection devices to turn on or can cause damage to the unit. Also, the input frequency should be within +/-2 Hz of the specified input frequency.

8) Do not use this inverter with a motor whose rated input is greater than the rated inverter output.

9) This inverter is designed to operate NEMA B motors. Consult the factory before using the inverter for special applications such as an explosion proof motor or one with a repetitive type piston load.

10) Do not apply commercial power to the output terminals T1 (U), T2 (V), or T3 (W) even if the inverter source power is off. Disconnect the inverter from the motor before megging or applying bypass voltage to the motor.

11) Interface problems can occur when this drive is used in conjunction with some types of process controllers. **Signal isolation may be required to prevent controller and/or drive malfunction** (contact Toshiba or the process controller manufacturer for additional information about compatibility and signal isolation).

12) Do not open and then re-close a secondary magnetic contactor (MC) between the drive and the load unless the drive is OFF (output frequency has dropped to zero) and the motor is not rotating. **Abrupt re-application of the load while drive is on or while motor is rotating can cause drive damage.**

13) Use caution when setting output frequency. Overspeeding a motor can decrease its torque-developing ability and can result in damage to the motor and/or driven equipment.

14) Use caution when setting the acceleration and deceleration time. Unnecessarily short times can cause tripping of the drive and mechanical stress to loads.

Confirmation of Wiring **CAUTION**

Make the following final checks before applying power to the unit:

1) Confirm that source power is connected to terminals L1, L2, L3 (R, S, T). **Connection of incoming source power to any other terminals will damage the drive.**

2) The 3-phase source power should be within the correct voltage and frequency tolerances.

3) The motor leads must be connected to terminals T1, T2, T3 (U, V, W).

4) Make sure there are no short circuits or inadvertent grounds and tighten any loose connector terminal screws.

Start-Up and Test **CAUTION**

Prior to releasing an electrical drive system for regular operation after installation, the system should be given a start-up test by qualified personnel. This assures correct operation of the equipment for reasons of reliable and safe performance. It is important to make arrangements for such a check and that time is allowed for it.

When power is applied for the first time, the drive automatically starts up in the frequency monitor function of standard monitor mode with the 'default' parameters set as shown in the "FACTORY SETTING" column of the parameter tables starting on page 8-1. If these settings are not optimal for the application, program the desired settings before initiating a run. **The drive can be operated with no motor connected.** Operation with no motor connected or use with a small trial motor is recommended for initial adjustment or for learning to adjust and operate the drive.

Maintenance **CAUTION**

1) Use power **lockout/tagout procedures** on the disconnecting means in accordance with applicable electrical codes (see 1996 NEC Article 430-101) before performing any drive maintenance.

2) Periodically check the operating drive for cleanliness.

3) Do not use liquid cleaning agents.

4) Keep the heatsink free of dust and debris.

5) Periodically check electrical connections for tightness (**with power off, locked out, and with charge LED extinguished (see page 5-1 for location)**).

230 Volt NEMA Type 1 Chassis Standard Ratings

E3		STANDARD RATINGS							
MODEL	NOTES (see below)	RATED KVA	MOTOR HP(KW)	OUTPUT CURRENT (AMPS)	DCL INDUCTOR (mH)	DCL CURRENT (A)	OUTPUT VOLTAGE	OVERLOAD CURRENT	MAIN CIRCUIT INPUT POWER 3-PHASE
2035	1,2	3.5	3/2.2	9.6	NA	NA	200-230V 3-PHASE MAXIMUM VOLTAGE	110% FOR 60 SEC. 100% CONTINUOUS	200V/50Hz or 200-230V/60Hz VOLTAGE:+/-10% FREQ:+/-2Hz
2055	1,2	5.5	5/3.7	15.2	NA	NA			
2080	1,2	8	7.5/5.5	22	** 0.4	30			
2110	1,2	11	10/7.5	29	** 0.2	38			
2160	1,2	16	15/11	42	** 0.2	57			
2220	1,2	22	20/15	56	* 0.2	76			
2270	1,2	27	25/18	71	* 0.1	114			
2330	1,2	33	30/23	84	* 0.1	114			
2400	1,2	40	40/30	96	NA	NA			
2500	1,2	50	50/37	124	NA	NA			
2600	1,2	60	60/45	156	NA	NA			

460 Volt NEMA Type 1 Chassis Standard Ratings

E3		STANDARD RATINGS							
MODEL ****	NOTES (see below	RATED KVA	MOTOR HP(KW)	OUTPUT CURRENT (AMPS)	DCL INDUCTOR (mH)	DCL CURRENT (A)	OUTPUT VOLTAGE	OVERLOAD CURRENT	MAIN CIRCUIT INPUT POWER 3-PHASE
4055A	1,2	5.5	5/3.7	7.6	** 2.5	11	380-460V 3-PHASE MAXIMUM VOLTAGE	110% FOR 60 SEC. 100% CONTINUOUS	380V/50Hz or 400-460V/60Hz VOLTAGE:+/-10% FREQ:+/-2Hz
4080A	1,2	8	7.5/5.5	11	** 1.8	15			
4110A	1,2	11	10/7.5	14	** 1.3	20			
4160A	1,2	16	15/11	21	** 0.9	29			
4220A	1,2	22	20/15	27	** 0.7	39			
4270	1,2	27	25/18.5	34	*** 0.5	50			
4330	1,2	33	30/22	40	*** 0.5	55			
4400	1,2	40	40/30	52	*** 0.4	75			
4500	1,2	50	50/37	65	*** 0.3	88			
4600	1,2	60	60/45	77	*** 0.2	114			
4750	1,2	75	75/55	96	*** 0.2	141			
410K	1,2	100	100/75	124	*** 0.15	175			
412K	1,2	125	125/95	156	*** 0.23	220			
415K	1,2	150	150/110	180	** 0.18	306			
420K	1,2	200	200/150	240	** 0.14	410			
425K	1,2	250	250/185	300	** 0.11	510			
430K	1,2	300	300/220	360	** 0.09	615			
435K	1,2	350	350/280	420	** 0.09	660			

NOTES:

1) UL/CUL (Underwriters Laboratories Inc.) listed.
2) UL1995 certified (See note 18 on page 2-2)
* Internal option
** External option
*** Standard internal feature
**** Models with 'A' suffix have a different spare parts list.

600 Volt NEMA TYPE 1 Standard Enclosure Ratings

E3		STANDARD RATINGS							
MODEL	NOTES (see below)	RATED KVA	MOTOR HP(KW)	OUTPUT CURRENT (AMPS)	DCL INDUCTOR (mH)	DCL CURRENT (A)	OUTPUT VOLTAGE	OVERLOAD CURRENT	MAIN CIRCUIT INPUT POWER 3-PHASE
6060	1,2	6	5 (3.8)	6.1	* 2.5	11	600V 3-PHASE MAXIMUM VOLTAGE	150% FOR 120 SEC. 110% CONTINUOUS	575-600V/60Hz 525V/50Hz VOLTAGE:+/-10% FREQ:+/-2Hz
6120	1,2	12	10(7.5)	12	* 0.9	29			
6160	1,2	16	15(11)	17	* 0.9	29			
6220	1,2	22	20(15)	22	* 0.7	39			
6270	1,2	27	25(18.5)	27	* 0.5	55			
6330	1,2	33	30(22)	32	* 0.5	50			
6400	1,2	40	40(30)	41	* 0.4	75			
6500	1,2	50	50(37)	52	* 0.4	75			
6600	1,2	60	60(45)	62	* 0.3	88			
6750	1,2	75	75(55)	77	* 0.2	114			
610K	1,2	100	100(75)	99	* 0.2	141			
612K	1,2	125	125(90)	125	* 0.15	175		130% FOR 120 SEC. 110% CONTINUOUS	

NOTES:
1) UL/CUL (Underwriters Laboratories Inc.) listed.
2) UL1995 certified (See note 18 on page 2-2)
* Internal option
** External option
*** Standard internal feature

Standard Specifications

ITEM		STANDARD SPECIFICATIONS
Principal Control Specifications	Control System	Sinusoidal PWM control
	Output voltage regulation	Same as power line.
	Output frequency	0.01 to 400 Hz (0.1 to 80Hz default setting)*. 800 Hz operation possible.
	Frequency setting	0.1Hz from operating panel input (60Hz base), 0.01Hz from analog input (60Hz base, 12-bit/0 to 10Vdc), 0.01Hz from computer interface (60Hz base)
	Frequency accuracy	Analog input: ±0.2% of the maximum output frequency (25°C±10°C), Digital input: ±0.01% (25°C±10°C)
	Voltage/frequency characteristics	Constant V/f, variable torque, automatic torque boost, True Torque Control and automatic energy-saving control/maximum voltage frequency adjustment (25 to 400Hz), torque boost adjustment (0 to 30%), start-up frequency adjustment (0 to 10Hz).
	PWM carrier frequency	Adjustable between 0.5 and 15kHz, self adjusting
	Transistor type	Insulated gate bipolar (IGBT)
	Output voltage regulation	Drive can be programmed to fix max. output volts, let max. float with input voltage, or set max. to input voltage sensed at power-up.
	Dynamic braking	***Feature not available in E3 drives above 30 HP.***
Frequency	Input signals	3k ohms potentiometer (1k ohm to 10k ohm-rated potentiometer can be connected). 0 to 10Vdc (Z_{in}=33k ohm), ±10 Vdc (Z_{in}=67k ohm), +/-5 Vdc (Z_{in}=34k ohm), 4 to 20mAdc (Z_{in}=500 ohm)
	Set point control (PID)	Proportional gain, integral gain, anti-hunting gain, lag time constant, and PID error limit adjustments.
Operating functions	Accel/decel time	0.1 to 6000 secs, accel/decel time 1 or 2 selection, accel/decel pattern selection
	Forward or reverse run	Forward run when F-CC closed (default); reverse run when R-CC closed (default); reverse run when both closed (default); coast-stop when ST-CC opened (default); emergency coast stop by a command from operating panel or terminal block; 3-wire control and motorized speed pot programmable functions.
	Jogging run	Jog run from panel with JOG mode selection. Terminal block operation possible with parameter settings.
	Multispeed run	Set frequency plus 15 preset speeds possible with combinations of CC, SS1, SS2, SS3, and SS4.
	Retry	When a protective function is activated, the system checks main circuit devices, and attempts to restart. Settable to a maximum of 10 times; wait time adjustment (0 to 10 secs)
	Soft stall	Automatic load reduction during overload (Default setting: OFF).
	Automatic restart	A coasting motor can be smoothly restarted (Default setting: OFF).
	Pattern Run	4 groups of 8 patterns each can be set to the 15 preset speed values. A maximum of 32 different patterns can be run; terminal block control/repetitive run possible.
	DC injection braking	Braking starting frequency adjustment (0 to 120Hz), braking current adjustment (0 to 100%), braking time adjustment (0 to 10secs), emergency stop braking function, motor shaft stationary control.
	Upper/Lower limit	Limits the frequency between the set values (0 to max. frequency). Can be indicated via output contact closure.
	Frequency jump	3 jump frequency settings (each with unique band settings)
	Edit function	Easy access user group containing all changed parameters
	Blind function	Select to display needed parameter groups and parameters
	User-defined defaults	User's parameter values can be saved into a default library. User can then default drive to Toshiba's values or to the user's own.

* Consult the factory for applications above 80 Hz.

Standard Specifications (cont'd)

ITEM		STANDARD SPECIFICATIONS
Display	Interface	4-digit, 7-segment LEDs
	Fault display	Overcurrent, overvoltage, heatsink overheat, load-side short-circuit, load-side ground fault, inverter overload, stator overcurrent during start-up, load-side overcurrent during start-up, EEPROM error, RAM error, ROM error, communication error, (dynamic braking unit overcurrent/overload), (emergency stop), (undervoltage), (low current), (overtorque), (open output phase), (motor overload). Items in parenthesis can be selected or deselected.
	Monitor functions	Terminal input/output status, forward/reverse, frequency setting value, output frequency, output current, output voltage, input power, output power, torque current, cumulative run time, past faults, excitation current, DBR overload ratio, inverter overload ratio, motor overload ratio, PID feedback value, DC voltage.
	Selectable units display	Can scale frequency display. Selection of display of current in amps or %, voltage in V or %.
	LED charge indicator	Indicates that the main circuit capacitors are charged
	LED local/remote indicator	Mounted in LOCAL/REMOTE key. Indicates local (keypad) or remote (terminal) control.
	LED manual/auto indicator	Mounted in MANUAL/AUTO key. Indicates manual (keypad) or auto (terminal) run command.
Inverter/Motor	Protective functions	Soft-stall, current limit, overcurrent, overvoltage, short-circuit at load, load-side ground fault, undervoltage, momentary power failure, regeneration power ride-through, electronic thermal overload protection, main circuit overcurrent at start-up, load-side overcurrent during start-up, DBR resistor overcurrent/overload, heatsink over heat, emergency stop, open output phase.
	Electronic thermal characteristics	Drive's motor overload protection for motor can be adjusted for motor rated amperage. Motor overload has adjustable speed sensitivity. Soft stall on/off. Motor 110% time programmable.
	Reset	Fault reset via keypad, remote contact closure, or programming drive retry. Cycling power resets fault (fault display can bemaintained)
	Regeneration power ride-through control	Some E3 ratings can use regen energy from motor to maintain operation during brown-outs.
Output signals	Fault detection signal	NC/NO form C contact (250VDC, 2A)
	Low output signal	Dry contacts (250VDC, 2A)
	Reach output signal	Open collector output (max. 24 Vdc, 50mA)
	Programmable meter output signals	Pre-compensation reference frequency, post-compensation output frequency, frequency setting value, output current, DC voltage, output voltage, torque current, excitation current, PID feedback value, motor/inverter/DBR overload ratio, input/output power.
	Pulse-train frequency	Open collector output (max. 24 Vdc, 50mA)
	Communication functions	RS232C equipped as standard (connector: modular 6P), RS485, DN, TOSLINE-F10, TOSLINE-F20, RIO, METASYS, & MB+ are options.
Enclosure	Type	NEMA Type 1 (UL1995 certified)
	Cooling method	Forced air cooling . Fan can be automatically stopped when not necessary for extended fan life.
	Color	Sherwin Williams Precision Tan #F63H12
	Service environment	Indoor. Consult factory for elevations above 1000m (requires derate). For example, at 2000m, derate drive FLA by 11%. Must not be exposed to direct sunlight, corrosive and/or explosive gases or mists, fibers and dusts.
	Ambient temperature	From -10°C to 40°C (14°F to 104°F).
	Relative humidity	20 to 95% maximum (non-condensating)
	Vibration	5.9 m/s^2(0.6G) maximum (10 to 55Hz)
	Climatic class	3K3
	Polution degree	2
	IP rating	2X

Standard Connection Diagrams

TOSVERT-130E3
STANDARD CONNECTION
MODEL 2035 TO 2330

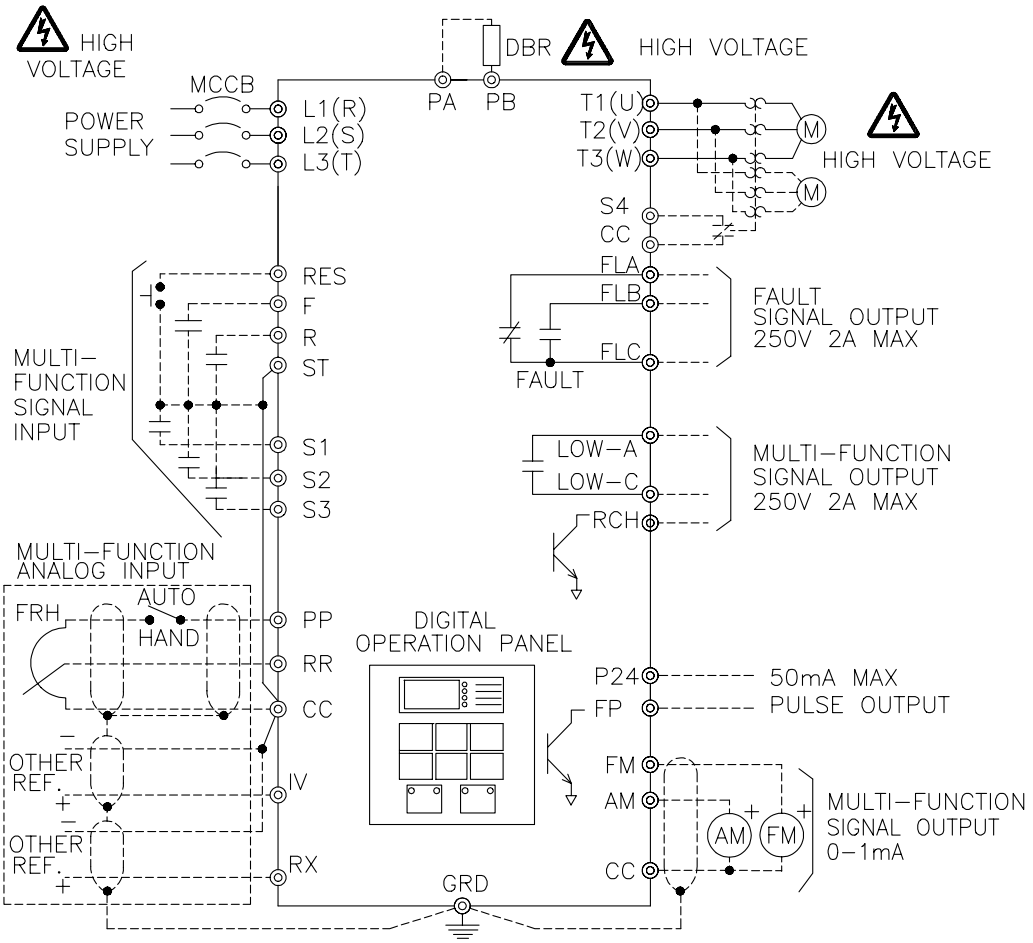

NOTES:

1.) For drive models 2035 through 2330 use 3-phase input power supply of 200VAC, 50Hz or 200-230VAC, 60Hz.

2.) Terminal ST and S4 are set to factory (default) and must be connected to CC for the drive to run. Jumpers connections to CC are installed by the factory. These terminals can be used as emergency stop by breaking the connection such as through a normally closed relay contact. **All input terminals can be programmed for other functions and may not necessarily function as emergency off.** In these cases remove the jumpers. (See Terminal Selection Parameters on page 9-7and 9-11)

3.) The S4 input terminal is shown above as an EMERGENCY OFF. When the drive is emergency stopped by breaking this connection it will not restart by making this connection.

Standard Connection Diagrams (cont'd)

TOSVERT-130E3
STANDARD CONNECTION
MODEL 4055 TO 4220

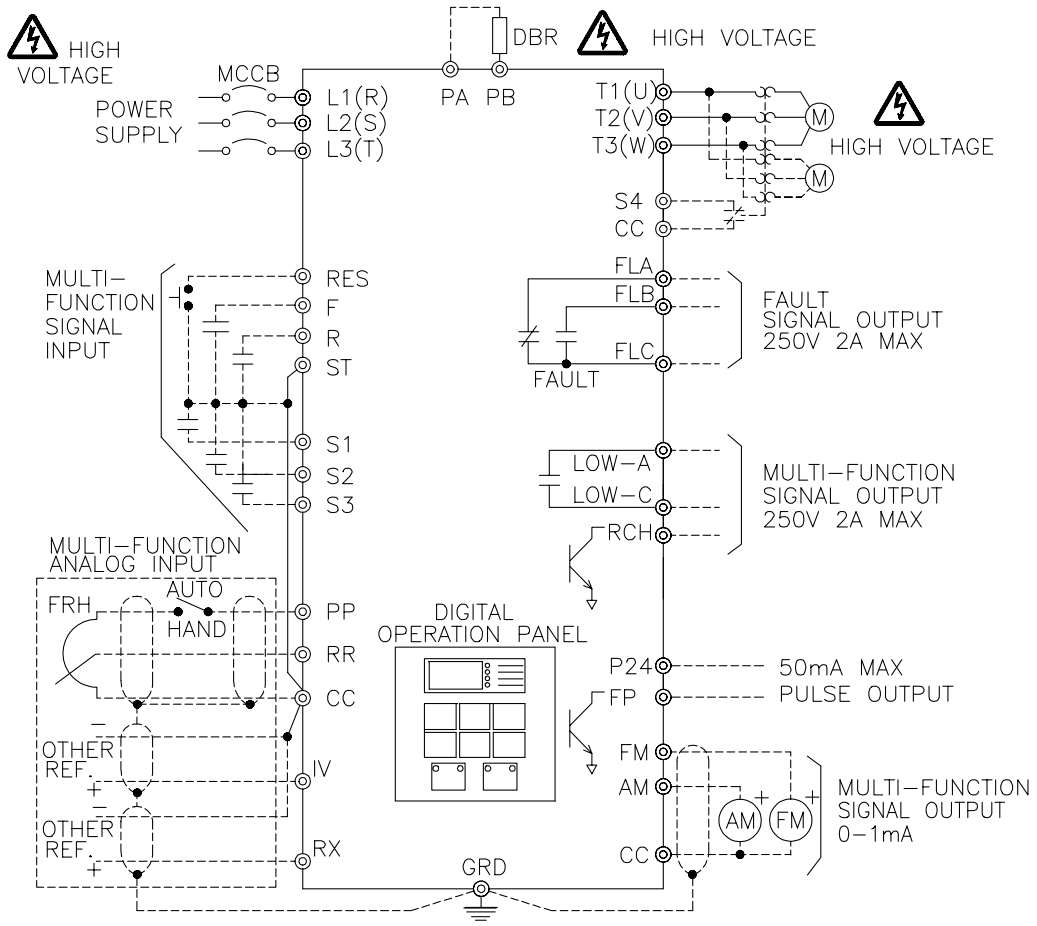

NOTES:

1.) For drive models 4055 through 4220 use input power supply of 380VAC, 50Hz or 400-460VAC, 60Hz.

2.) Terminal ST and S4 are set to factory (default) and must be connected to CC for the drive to run. Jumpers connections to CC are installed by the factory. These terminals can be used as emergency stop by breaking the connection such as through a normally closed relay contact. **All input terminals can be programmed for other functions and may not necessarily function as emergency off.** In these cases remove the jumpers. (See Terminal Selection Parameters on page 9-7and 9-11)

3.) The S4 input terminal is shown above as an EMERGENCY OFF. When the drive is emergency stopped by breaking this connection it will not restart by making this connection.

Standard Connection Diagrams (cont'd)

TOSVERT-130E3
STANDARD CONNECTION
MODEL 4270 TO 4500

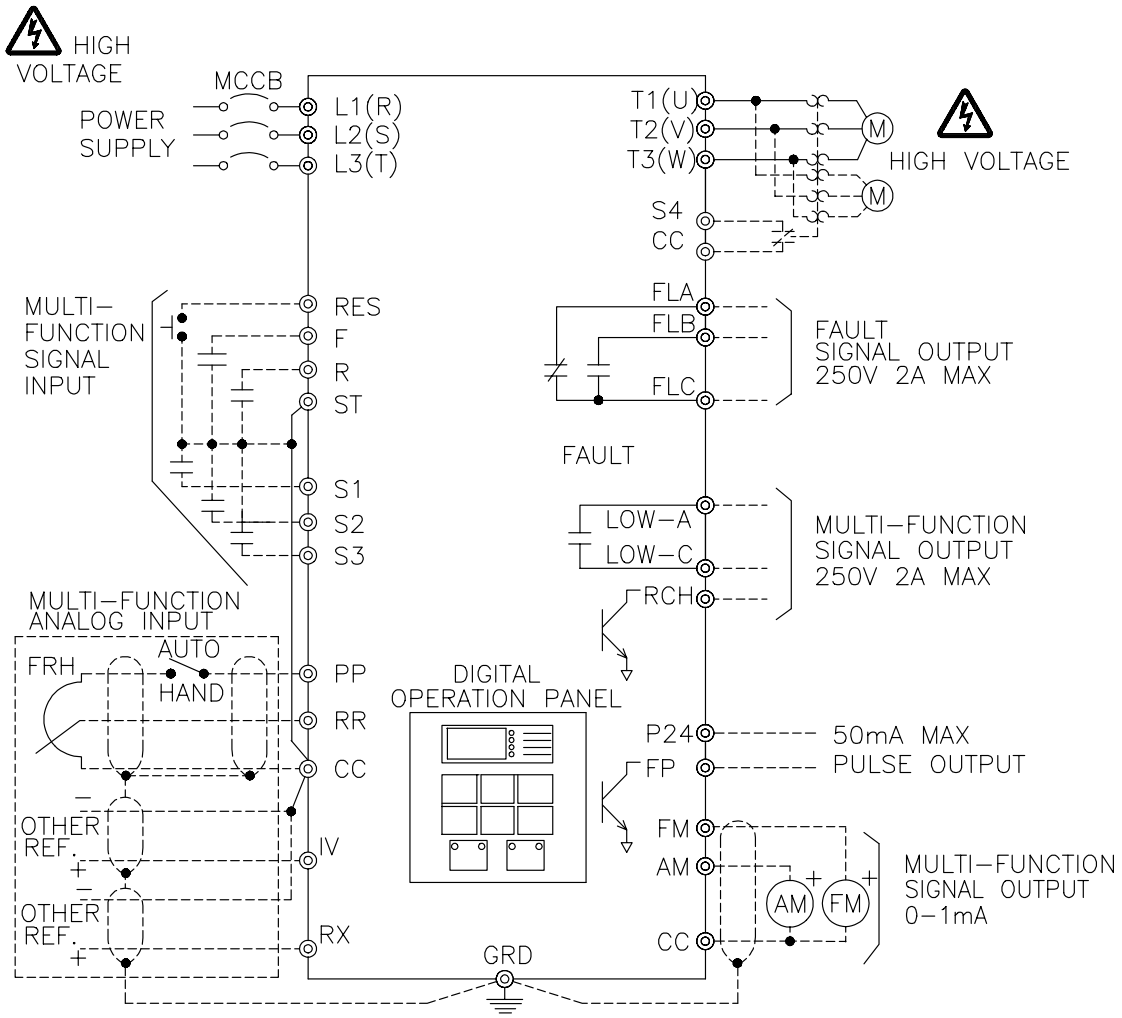

NOTES:

1.) For drive models 4270 through 4500 use input power supply of 380VAC, 50Hz or 400-460VAC, 60Hz.

2.) Terminal ST and S4 are set to factory (default) and must be connected to CC for the drive to run. Jumpers connections to CC are installed by the factory. These terminals can be used as emergency stop by breaking the connection such as through a normally closed relay contact. **All input terminals can be programmed for other functions and may not necessarily function as emergency off.** In these cases remove the jumpers. (See Terminal Selection Parameters on page 9-7and 9-11)

3.) The S4 input terminal is shown above as an EMERGENCY OFF. When the drive is emergency stopped by breaking this connection it will not restart by making this connection.

Standard Connection Diagrams (cont'd)

TOSVERT-130E3
STANDARD CONNECTION
MODEL 4600 TO 412K & MODEL 2400 TO 2600

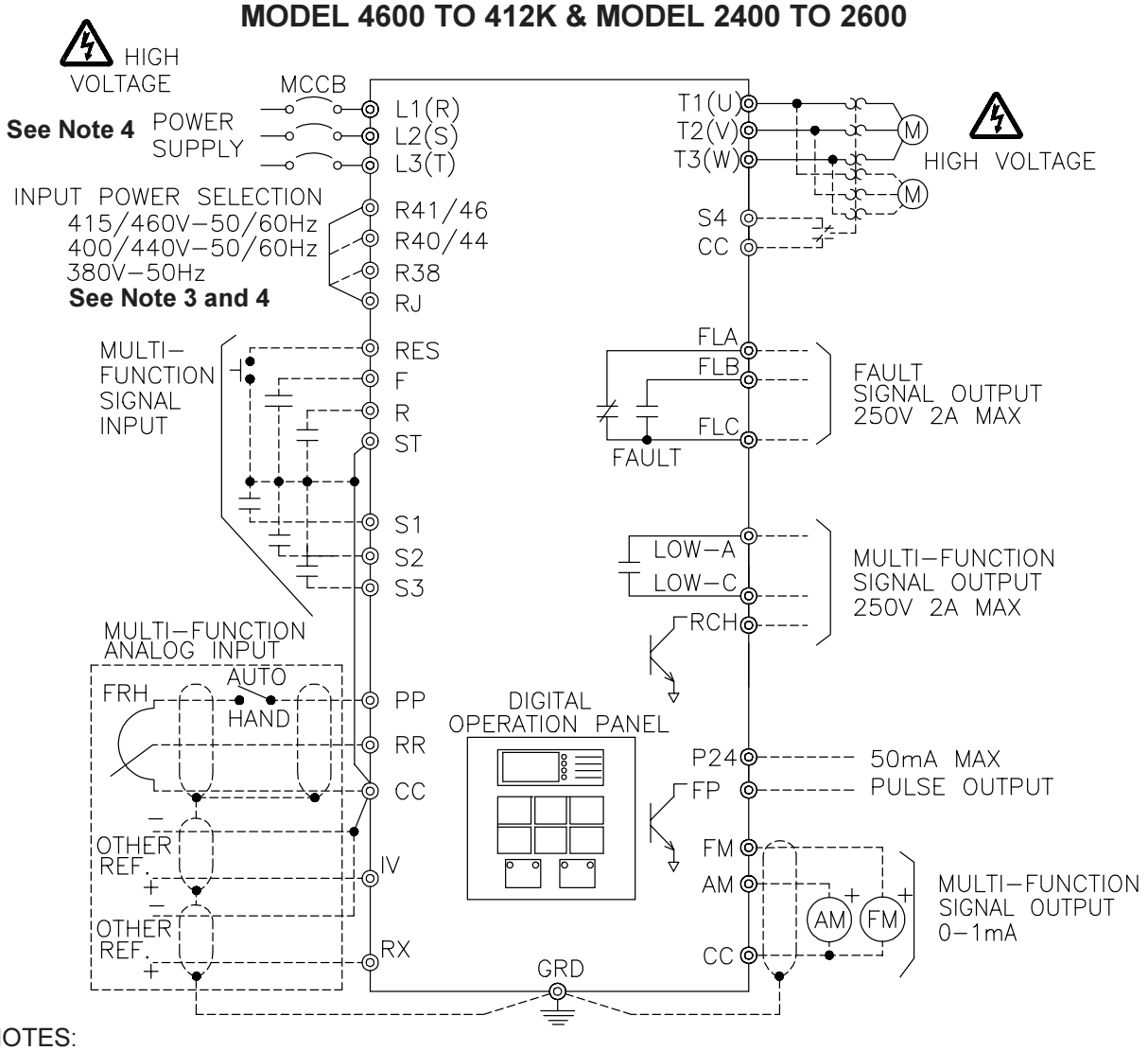

NOTES:

1.) Terminal ST and S4 are set to factory (default) and must be connected to CC for the drive to run. Jumpers connections to CC are installed by the factory. These terminals can be used as emergency stop by breaking the connection such as through a normally closed relay contact. **All input terminals can be programmed for other functions and may not necessarily function as emergency off.** In these cases remove the jumpers. (See Terminal Selection Parameters on page 9-7and 9-11)

2.) The S4 input terminal is shown above as an EMERGENCY OFF. When the drive is emergency stopped by breaking this connection it will not restart by making this connection.

3.) Input power selection terminals not applicable in Models 2400 to 2600.

4.) Input power selection terminals are removed and replaced with terminals L4, L5, L6 when 12-pulse option is installed. Use 230 volt supply to terminals L1, L2, L3 and 230 volt supply to terminals L4, L5, L6. Available only in 60 through 100 HP models.

Standard Connection Diagrams (cont'd)

TOSVERT-130E3
STANDARD CONNECTION
MODEL 415K TO 435K

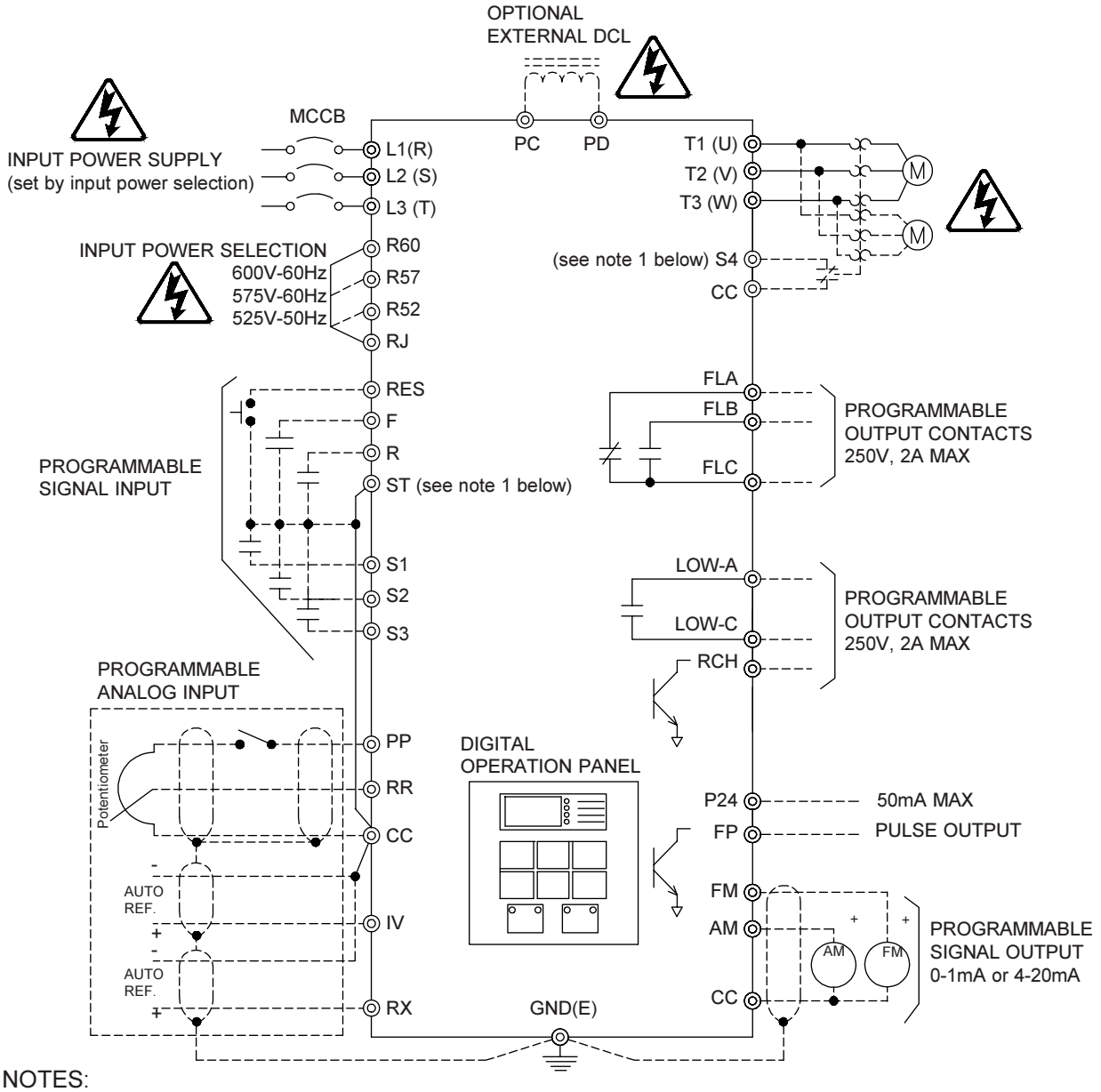

NOTES:

1.) Terminal ST and S4 are set to factory (default) and must be connected to CC for the drive to run. Jumpers connections to CC are installed by the factory. These terminals can be used as emergency stop by breaking the connection such as through a normally closed relay contact. **All input terminals can be programmed for other functions and may not necessarily function as emergency off.** In these cases remove the jumpers. (See Terminal Selection Parameters on page 9-7and 9-11)

2.) The S4 input terminal is shown above as an EMERGENCY OFF. When the drive is emergency stopped by breaking this connection it will not restart by making this connection.

Standard Connection Diagrams (cont'd)

TOSVERT-130E3
STANDARD CONNECTION
MODEL 6060 TO 612K

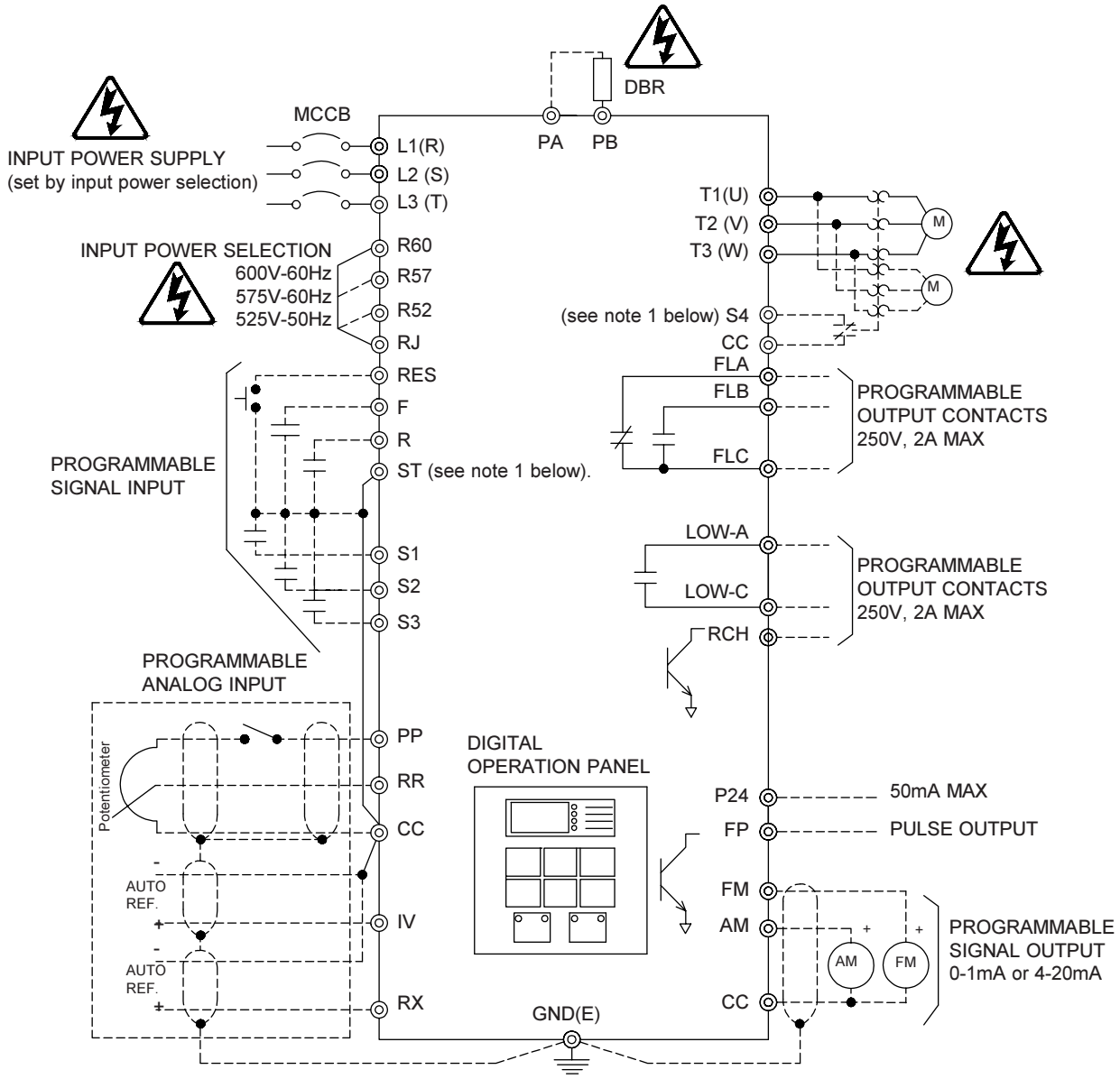

NOTES:

1.) Terminal ST and S4 are set to factory (default) and must be connected to CC for the drive to run. Jumpers connections to CC are installed by the factory. These terminals can be used as emergency stop by breaking the connection such as through a normally closed relay contact. **All input terminals can be programmed for other functions and may not necessarily function as emergency off.** In these cases remove the jumpers. (See Terminal Selection Parameters on page 9-7and 9-11)

2.) The S4 input terminal is shown above as an EMERGENCY OFF. When the drive is emergency stopped by breaking this connection it will not restart by making this connection.

Selection of Main Circuit Wiring Equipment and Standard Cable Sizes

Drive	* Molded case circuit breaker (MCCB)	Ampacity (FLA x 1.25)	** Typical cable size (AWG)			
Model Number	Amp rating (A)	(A)	Main power and motor load	Input / Output Lug Wire Capacity	Frequency command input, frequency meter, ammeter	Other signal circuits
E3-2035	20	12	#14	24-12 / 24-12	3-core shield cable (speed reference) 2-core shield cable #20	#18
E3-2055	30	19	#14	24-12 / 24-12		
E3-2080	50	28	#10	24-8 / 24-8		
E3-2110	70	37	#8	24-8 / 24-8		
E3-2160	90	53	#6	18-2 / 18-2		
E3-2220	100	70	#4	18-2 / 18-2		
E3-2270	125	89	#3	14-2 / 14-2		
E3-2330	150	105	#2	14-2 / 14-2		
E3-2400	175	120	#1	6-250 / 6-250		
E3-2500	175	155	#2/0	6-250 / 6-250		
E3-2600	200	195	#3/0	6-250 / 6-250		
E3-4055	15	10	#14	24-12 / 24-12		
E3-4080	30	14	#14	24-12 / 24-12		
E3-4110	30	18	#14	24-12 / 24-12		
E3-4160	40	27	#10	24-8 / 24-8		
E3-4220	50	34	#10	24-8 / 24-8		
E3-4270	70	43	#8	14-2 / 18-2		
E3-4330	90	50	#6	14-2 / 18-2		
E3-4400	100	65	#4	14-2 / 18-2		
E3-4500	100	82	#4	14-2 / 18-2		
E3-4600	125	97	#3	6-250 / 6-250		
E3-4750	175	120	#1	6-250 / 6-250		
E3-410K	175	155	#2/0	6-250 / 6-250		
E3-412K	200	195	#3/0	6-250 / 6-250		
E3-415K	250	225	#4/0	6-250 / 6-250		
E3-420K	350	300	*** 2 (#2/0)	6-250 / 6-250		
E3-425K	400	375	*** 2 (#3/0)	6-250 / 6-250		
E3-430K	500	450	*** 2 (#4/0)	6-250 / 6-250		
E3-435K	600	525	*** 2 (#300)	1/0-500 / 1/0-500		

Chart and notes continued on following page

Selection of Main Circuit Wiring Equipment and Standard Cable Sizes (cont'd)

Drive	* Molded case circuit breaker (MCCB)	Ampacity (FLA x 1.25)	** Typical cable size (AWG)			
Model Number	Amp rating (A)	(A)	Main power and motor load	Input / Output Lug Wire Capacity	Frequency command input, frequency meter, ammeter	Other signal circuits
E3-6060	15	8	#14	24-12 / 24-12	3-core shield cable (speed reference) 2-core shield cable #20	#18
E3-6120	30	15	#14	24-12 / 24-12		
E3-6160	35	22	#12	14-2 / 18-2		
E3-6220	50	28	#10	14-2 / 18-2		
E3-6270	60	34	#8	14-2 / 18-2		
E3-6330	70	40	#8	6-250 / 18-2		
E3-6400	90	52	#6	6-250 / 18-2		
E3-6500	100	65	#4	6-250 / 18-2		
E3-6600	100	78	#3	6-250 / 6-250		
E3-6750	125	97	#2	6-250 / 6-250		
E3-610K	175	124	#1/0	6-250 / 6-250		
E3-612K	200	157	#2/0	6-250 / 6-250		

* A customer supplied disconnect means must be provided in the motor branch circuit which supplies power to the drive. It can be separate for use with customer supplied fuses or it can be an integral part of a customer supplied 3-pole circuit breaker (see 1996 NEC Article 430-103 through 430-113). All drives in this series are rated for output short circuit fault currents of 200,000A. The selection of MCCB (molded case circuit breaker) for this table is in accordance with 1996 NEC Article 430-51, 430-52, 430-152, and 240-6.

** Wire sizing is based upon NEC table 310-16 or CEC Table 2 using 75 deg C cable, an ambient of 30 deg C, cable runs for less than 300 FT., and copper wiring for not more than three conductors in raceway or cable or earth (directly buried). The customer should consult the NEC or CEC wire Tables for his own particular application and wire sizing.

*** Use two parallel conductors instead of a single conductor (this will allow for the proper wire bending radius within the cabinet). Use separate conduits for routing parallel conductors. This prevents the need for conductor derating (see note 3 this page).

Notes:

1.) Contacts used to connect drive terminals should be capable of switching low current signals (i.e. 5 mA).

2.) The drive has internal motor overload protection which has been functionally certified by Underwriters Laboratories Inc. and no additional external motor overload protection is required (see 1996 NEC Article 430-32 and 430-39).

3.) When wiring with parallel conductors, the conductors should be kept together in phase sets to avoid heating the surrounding metal by induction. Install U1, V1, W1 conductors in one conduit and parallel conductors U2, V2, W2 in another conduit. The ground conductor must be run in the same conduit. See 1996 NEC Article 300-20(a), 310-4, 310-5. Size the grounding conductor in accordance with 1996 NEC Table 250-95.

Notes continued to following page

Selection of Main Circuit Wiring Equipment and Standard Cable Sizes (cont'd)

Notes cont'd from preceding page

4) Twisted pair wiring should be used for external meters connected to AM and FM terminals.

5) For multiple motor applications, a thermal-magnetic circuit breaker must be installed between the drive and each motor. The thermal circuit is for overload sensing and the magnetic coil is for abnormal conditions such as short circuits. Select the MCCB (molded case circuit breaker) in accordance with 1996 NEC Article 430-51 through 430-53, 430-152, and 240-6.

CAUTION **Turn off power to the drive before making any wiring changes to the analog output circuits.**

CAUTION **Use separate conduits for routing incoming power, power to motor, and control conductors. Use no more than three power conductors and a ground conductor per conduit.**

Grounding

The inverter must be grounded in accordance with Article 250 of the National Electrical Code or Section 10 of the Canadian Electrical Code, Part I and the grounding conductor should be sized in accordance with 1996 NEC Table 250-95 or CEC, Part I Table 16. See Installation Safety Precautions notes 7 and 14.

CAUTION **Conduit is not a suitable ground for the inverter.**

Motor Selection

1) Exceeding the peak voltage rating or the rise time allowable of the motor insulation system will reduce the life expectancy. To insure good motor insulation life, consult with the motor supplier as to determine motor insulation ratings and allowable maximum output lead distance. Long lead lenghts between the motor and the drive may require filters to be added to the drive output.

Suggested Maximum[1] Output Lead Distance

AC Motor Voltage	PWM Carrier Frequency	NEMA MG-1-1998 Section IV Part 31 Compliant Motors [2]
230 V	All	1000 ft.
460 V	< = 5 kHz	600 ft.
460 V	> 5 kHz	300 ft.
575 V	< = 5 kHz	200 ft.
575 V	> 5 kHz	100 ft.

1 For lead lengths that exceed suggested maximum contact Toshiba for application assistance.

2 Toshiba EQP III, III-XS & EQP III-841 motors incorporate an insullation system that is in compliance with NEMA MG-1-1998 Section IV Part 31.

2) Bearing Considerations:
Motors operating from adjustable speed drive power sources tend to operate at higher temperatures which may increase the need for more frequent lubrication cycles.

Terminal Board

The terminal printed wiring board is shown in the detail below. See Terminal Connections and Functions starting on page 5-3. **This board is used in all drive sizes.**

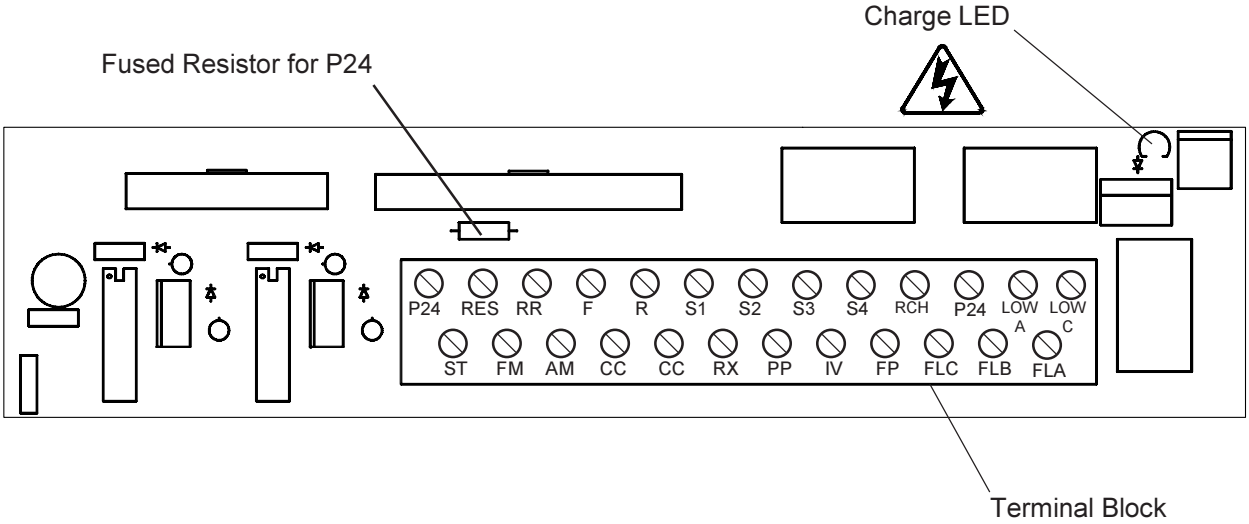

CAUTION **Turn off power to the drive before connecting or disconnecting any wiring to the terminal block.**

Control Board

The control printed wiring board is shown in the detail below. **This control board is used in all drive sizes.**

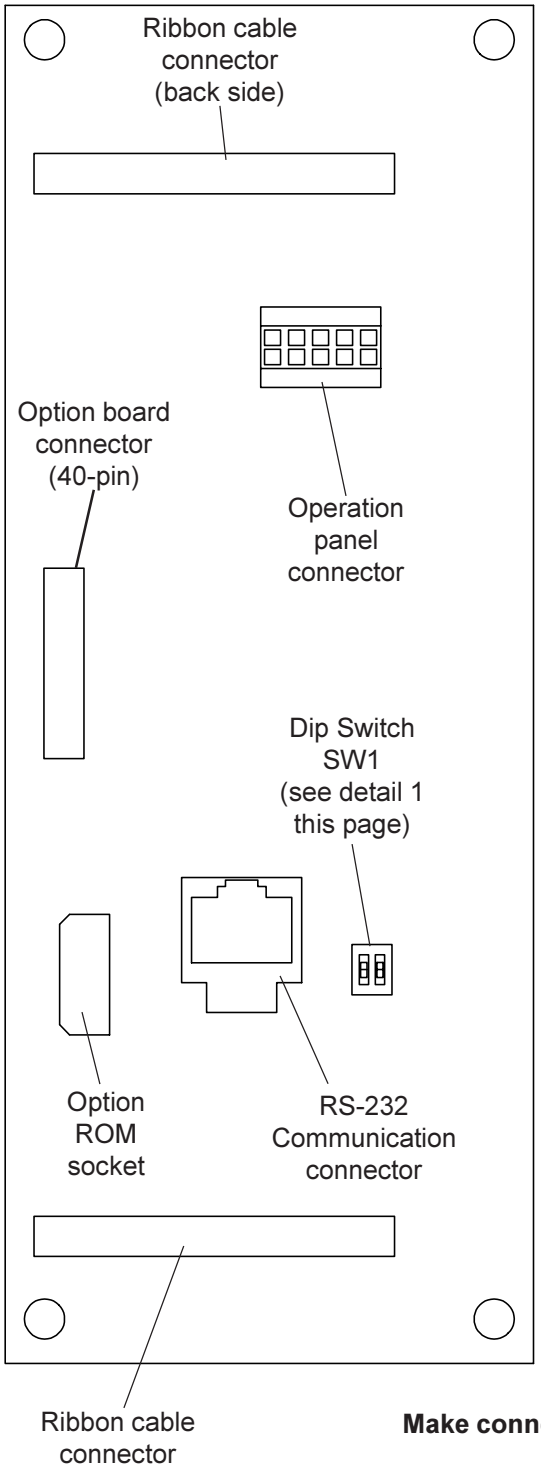

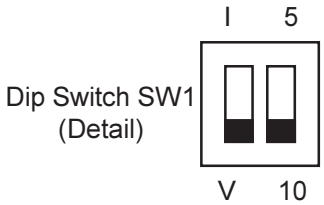

When a 0-1mA reference signal is input to terminal "IV", set switch SW1 to I

When a 0-10 volt reference signal is input to terminal "IV", set SW1 to V

When a +/- 0-5 volt reference signal is input to terminal "RX", set SW1 to 5

When a +/- 0-10 volt reference signal is input to terminal "RX", set SW1 to 10

Make connections to this board only with power off.

Terminal Connections and Functions

Terminal name	Terminal functions	Terminal location
L1, L2, L3 (R, S, T)	Line input supply terminals for models E3-2035 to E3-2330: Connect to either 3ø, 50Hz, 200VAC or 3ø, 60Hz, 200 to 230VAC. Line input supply terminals for models E3-4055 to E3-412K: Connect to either 3ø, 50HZ, 400VAC or 3ø, 60Hz, 400 to 460VAC. Line input supply terminals for models E3-6060 to E3-612K: Connect to either 3ø, 50HZ, 525VAC or 3ø, 60Hz, 575 to 600VAC. Drives can be operated on single phase power when appropriately derated; contact Toshiba distributor for information.	Terminal block or bus bar
T1, T2, T3 (U, V, W)	Motor output terminals. Connect these terminals to a 3-phase induction motor of the proper voltage, current, and horsepower.	
PA, PB	Braking resistor output terminals. Connect to an external dynamic braking resistor (DBR) (available on all 230 and 600 volt drives and only on 460 volt drives that are 20 HP and smaller).	
FLA, FLB, FLC	Programmable relay contact output. Contact rating is 250VAC - 2A. Default setting closes FLA-FLC when drive is powered. FLA-FLC opens and FLB-FLC closes when protective function is activated.	Terminal block (See page 5-1)
P24 (two terminals)	Unregulated 24Vdc power supply (24Vdc, 50mA maximum). P24 is protected by fused resistor found on the terminal board (see p. 5-1).	
RCH	Programmable open collector output. Standard setting applies a ground through the transistor when an acc/dec is complete, or when the output frequency is within a specified range.	
LOW(A & C)	Programmable relay contact output. Standard setting closes contact when a preset low speed or a preset lower limit is reached. Contact rating is 250Vac - 2A.	
PP	10 VDC supply typically used to drive potentiometers. Wipers from pots typically connected to "RR" or "RX" terminals.	
FM ***(do not make/break connection to this terminal with drive powered)***	Programmable analog output. Outputs 0 - 1mA current. This terminal can be connected to an external analog meter. Use either an ammeter rated 1mA DC/20 mA DC at full scale or a voltmeter rated 7.5Vdc at full scale (true analog output). See page 9-31 for programming.	
AM ***(do not make/break connection to this terminal with drive powered)***	Programmable analog output. Outputs 0 - 1mA current. This terminal can be connected to an external analog meter. Use either an ammeter rated 1mA DC/20 mA DC at full scale or a voltmeter rated 7.5Vdc at full scale (true analog output). See page 9-31 for programming.	
FP	Dedicated open-collector output. Pulses that are 48, 96, or 360-times the output frequency are available according to the parameter settings (must connect external supply through pull-up resistor to measure output).	
CC (2-terminals)	This is the common return for all of the input and output terminals. ***Do not connect this terminal to ground.***	

Terminal Connections and Functions (cont'd)

Terminal name	Terminal functions	Terminal location
RR	Programmable analog input. Default setting allows user to input a 0 - 10VDC signal as a frequency command. Input has bias/gain adjustments.	Terminal block (See page 5-1)
IV	Programmable analog input. User can input a 0 - 10VDC signal or a 4 - 20 mA DC signal as a frequency command (selection of current or voltage done via dipswitch on control board (see page 5-2). Input has bias gain adjustments.	
RX	Programmable analog input. User can input a +/- 10VDC or a +/- 5VDC signal as a frequency command (see page 5-2). Input has bias/gain adjustments for forward and reverse operation.	
ST	Programmable digital input. With default setting, shorting terminal to "CC" enables drive. Opening "ST" to "CC" coasts motor.	
F	Programmable digital input. With default setting, shorting terminal to "CC" gives drive forward run command. Opening "F" to "CC" decels motor to a stop.	
R	Programmable digital input. With default setting, shorting terminal to "CC" gives drive reverse run command. Opening "R" to "CC" decels motor to a stop.	
S1	Programmable digital input. With default setting, shorting "S1" to "CC" enables fire speed run.	
S2	Programmable digital input. With default setting, shorting "S2" to "CC" disables feedback control.	
S3	Programmable digital input. With default setting, shorting "S3" to "CC" gives drive preset speed frequency reference.	
S4	Programmable digital input. With default setting, shorting "S4" to "CC" gives no emergency off command.	
RES	Programmable digital input. With default setting, shorting "RES" to "CC" resets a tripped drive.	
R41/46	Input power selection. Shorting to "RJ" selects 415/460V-50/60Hz.	Terminal block (60HP and larger 460V models and all 600V models only)
R40/44	Input power selection. Shorting to "RJ" selects 400/440V-50/60Hz.	
R38	Input power selection. Shorting to "RJ" selects 380V-50Hz.	
R60	Input power selection. Shorting to "RJ" selects 600V-60Hz.	
R57	Input power selection. Shorting to "RJ" selects 575V-60Hz.	
R52	Input power selection. Shorting to "RJ" selects 525V-50Hz.	
RJ	This is the common return for input power selection terminals R41/46, R40/44, R38, R60, R57, and R52. ***Use only one selection at a time. Do not connect to CC.***	

Operating Panel Layout

The operating panel enables the user to enable or disable the keypad, input commands from the keypad, and monitor drive operation. The illustration below shows the operating panel keypad layout and the locations of the keys and display LED's.

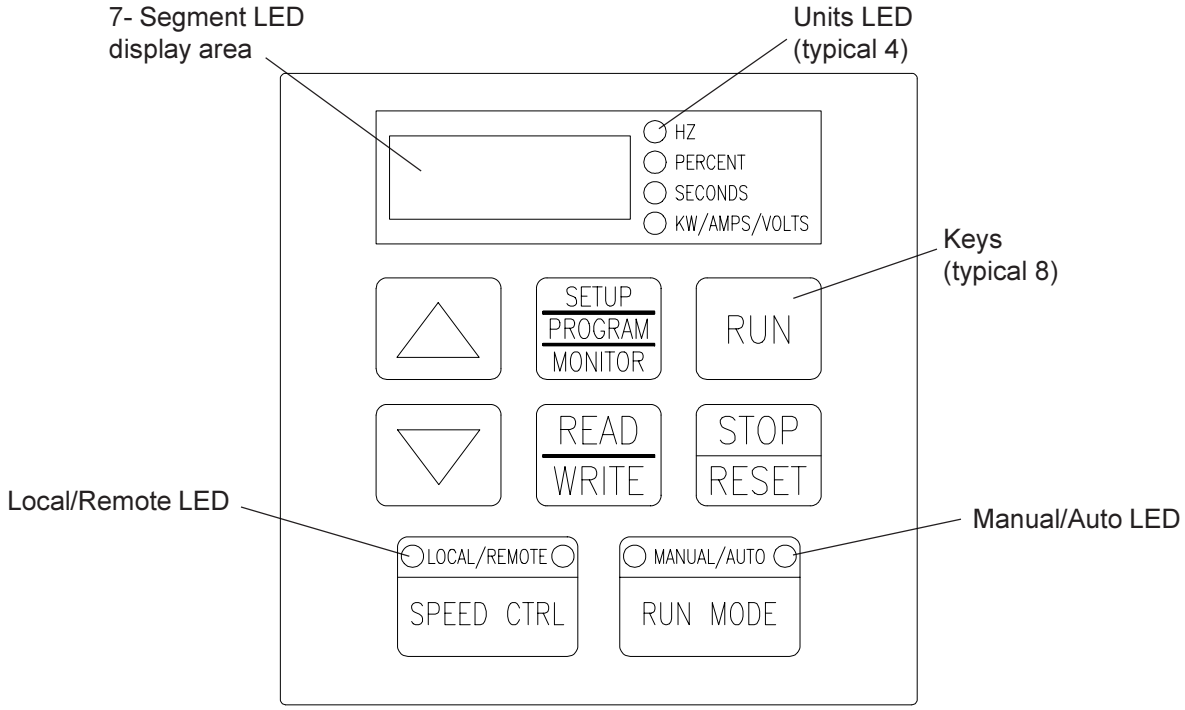

LED Display Description

A description of the LED display is given below:

1. 4 seven-segment LED character display.
   In standard monitor mode: displays the current output frequency
   In status monitor mode: monitors the status conditions and frequency command value setting
   In setup mode: displays setup parameter titles and values
   In program mode: displays parameter group titles, individual parameter names, and parameter values
   During a trip: displays the trip title

2. Local/Remote LEDs
   The appropriate local/remote LED which is inset into the speed control key is lit when the unit is in local or remote mode.

3. Manual/Auto LEDs
   The appropriate manual/auto LED which is inset into the run mode key is lit when the unit is manual or auto mode.

4. Units LEDs
   When numeric data is being displayed on the LED display, the corresponding unit indication LED will be lit. If no unit indication LED is lit, the current data has no unit or the corresponding unit does not exist on the display panel.

7-Segment Alphanumerics

The 7 segment LED display has a limited number of output characters, therefore the following figures and letters will be used for the display.

Numerics	LED display
0	0
1	1
2	2
3	3
4	4
5	5
6	6
7	7
8	8
9	9

Characters	LED display
A	A
b	b
C	C
c	c
d	d
E	E
F	F
G	G
H	H
h	h
I	I
J	J
L	L
M	M
n	n
O	O
P	P
q	q
r	r
S	S
t	t
U	U
v	v
y	y
-	-

Panel Keys and Functions

The following chart explains each of the key functions on the keypad

Keys and Functions

Key	Function
LOCAL/REMOTE SPEED CTRL	Local/Remote Key Switches the source of frequency command information from panel/terminal block. The appropriate LED is lit to indicate local or remote frequency command. Local/Remote key will be referred to as L/R key in this specification.
MANUAL/AUTO RUN MODE	Manual/Auto Key Switches the source of run/stop command information from panel/terminal block. The appropriate LED is lit to indicate manual or auto run/stop command.
SETUP PROGRAM MONITOR	Setup/Program/Monitor Key Toggles between Setup, Program, Monitor, and Frequency Mode. The Setup/ Program/Monitor key will be referred to as the S/P/M key in this specification.
READ WRITE	Read/Write Key Mode, group, parameter, data, and frequency selection key. This key is used to select or enter a parameter value, a frequency command, or a group name. The read/write key will be referred to as the R/W key in this manual.
△	Up Key Scrolls up the setting of the currently displayed parameter. If the key is held down, the scrolling speed gradually increases. Only RAM values are changed. Also toggles to other function group entries. The up and down keys will be referred to as the U/D key in this manual. Pushing R/W key saves the setting.
▽	Down Key Scrolls down the setting of the currently displayed parameter. If the key is held down, the scrolling speed gradually increases. Only RAM values are changed. Also toggles to other function group entries. The up and down keys will be referred to as the U/D key in this manual. Pushing R/W key saves the setting.
RUN	Run Key This key is used to start a RUN command (only valid when in manual control mode).
STOP RESET	Stop/Reset Key Functions as the STOP key and emergency stop key during local operation. Functions as the RESET key when an inverter trip occurs. In all other modes, emergency off is engaged when this key is pressed twice.

MODE SUMMARY

Function Outline

The fundamental operation of the E3 LED display/keypad is as follows:

1. Standard monitor mode (Local/Remote, Manual/Auto, Host, Option)
   (Mode selection level) When the drive is initially powered up, it is in standard monitor mode. The drive will display the current output frequency, trip code, or warning code. The drive will accept run/stop and frequency commands from the sources selected by the panel buttons or parameter settings. All appropriate panel LEDs will be lit to indicate frequency units, command mode, and frequency mode.

2. Setup mode
   2a. parameter selection
   2b. data selection
   Drive SETUP parameters are read and modified in this mode. Setup parameters are the most fundamental parameters that nearly all users must edit to operate the drive.

3. Program Mode
   3a. group selection
   3b. parameter selection
   3c. data selection
   All parameters can be read and modified in this mode. Parameters are grouped according to functions. The parameter groups can be blinded/unblinded.

4. Status monitor mode
   Displays operating conditions (frequency, current, voltage, etc.), terminal status, version, past error conditions, etc.

5. Meter adjustment
   Allows the adjustment of an external analog output frequency or current meter.

Standard Monitor Mode/frequency monitor function

When power is applied, the drive automatically starts up in the frequency monitor function of standard monitor mode. In the frequency monitor function, the output frequency is displayed and can be adjusted using the **U/D** keys. Pushing the **S/P/M** key again switches to the mode selection menu, and pushing the **S/P/M** key again toggles back to standard monitor mode.

Standard monitor mode - frequency command value setting

The local frequency command is adjusted by pushing the **U/D** keys while in standard monitor mode. The **S/P/M** key will toggle back to the standard monitor mode.

NOTE: However, the ability to use this function is limited by the FMOd parameter as shown below (O=permissible, X=not permissible).

Parameter Setting	*Function condition*
FMOd = 0	X
FMOd = 1	X
FMOd = 2	O
FMOd = 3	X
FMOd = 4	O

MODE SUMMARY

Standard Monitor Mode (cont'd)

The following example shows the frequency command value setting being changed from 0 Hz to 60 Hz (assuming present conditions are: local control mode, standard monitor mode, and the inverter is not running).

Key Operation	LED Message	Explanation
	0.0	Standard monitor mode (current output frequency displayed)
△ (press and hold)	XX.X	Display changes to indicate that the frequency command setting is displayed rather than the output frequency. Setting value gradually increases.
(release UP key)	60.0 *data blinking*	When the key is released, the value stops increasing and the new setting value will begin to blink to indicate that the displayed value (RAM) has been changed from non-volatile memory value (EEPROM). (See note 1 page 7-2)
READ/WRITE	FC↔60.0	When the read/write key is pressed, the parameter name, FC, and the new setting value will be alternately displayed to indicate that the new local frequency command setting value has been written to memory (EEPROM & RAM). After two alternating display cycles, the display will return to standard monitor mode, with the output frequency displayed.
0.0		Standard monitor mode (current output frequency displayed)

NOTE 1: The frequency command value has been set to 60Hz, but the data has been changed only in RAM, and was not changed in the E^2PROM. Under this condition, 60Hz operation can be achieved by the use of RUN and STOP keys, but if control power to the inverter is removed, the previous setting value (0.0Hz) will return.

If the frequency command value is changed during operation, the operating frequency will also change accordingly. If the command value precedes the actual operating frequency, the accel/decel of the motor will be dictated by the accel/decel times.

Standard monitor mode - switching between forward/reverse during operation
In standard monitor mode, the following key operations will allow switching between forward and reverse operation:

Key Operation	LED Message	Explanation
READ/WRITE + △	Fr-F	Indicates forward direction of motor operation
REAR/WRITE + ▽	Fr-r	Indicates reverse direction of motor operation

However, this switching can be done only while in manual control mode. The motor direction LED message is displayed while the key sequence is pressed and held. When the key sequence is released the display returns to standard monitor mode with output frequency displayed (See note 2 this page)

NOTE 2: Reverse run can be disabled using the parameter dISr which is described in section "Fundamental Parameters #1" on page 8-2.

MODE SUMMARY

Standard monitor mode - status alarms
In standard monitor mode, there are five alarm conditions that will cause alarm messages to be displayed. The alarm message and the output frequency will be displayed simultaneously if possible and flashed alternately if not. The following five conditions will cause warning messages to be displayed: overload, overvoltage, overcurrent, overheat, and communication timeout. The alarm indicators will be displayed either singularly or in combination with other alarm indicators if multiple alarm conditions exist simultaneously. If the alarm condition(s) is removed, the alarm message will automatically be removed from the display.

Key Operation	LED Message	Explanation
Because these warning displays are automatic, no key input	L	Indicates overload condition
	P	Indicates overvoltage condition
	C	Indicates overcurrent condition
	H	Indicates overheat condition
	t	Indicates communication timeout condition
	LC	Indicates an overload and overcurrent condition
	LCH	Indicates overload, overcurrent, and overheat conditions

Mode selection menu
If the S/P/M key is pressed while in standard monitor mode, the mode selection menu is displayed. This menu contains 3 selections: setup mode, program mode, and status monitor mode. It is possible to scroll through the menu selections until the desired mode is displayed. The mode is selected by pressing the R/W key.

The following menu selections are available in the mode selection menu:

Mode selections	Explanation
SEtP	Setup mode selection
PrOG	Program mode selection
Mon	Status monitor mode selection

Each of these modes is described in more detail in the following sections.

MODE SUMMARY

Setup mode

Setup mode is a program group requested specifically for the HVAC industries. The setup group is to provide simplified access to the most fundamental drive parameters that nearly every user will access regularly. Setup mode is entered by selecting the SEtP mode in the mode selection menu and pressing the READ key. It is then possible to scroll through the various setup parameters using the up/down keys and edit the desired parameters using the READ/WRITE and UP/DOWN keys. Pressing the **S/P/M** key will return the user to standard monitor mode. The following is an example of accessing and editing a setup parameter (starting from standard monitor mode).

Key Operation	LED Message	Explanation
	0.0	Standard monitor mode (current output frequency displayed)
S/P/M	SEtP	Display changes to the first entry in the mode selection menu, SEtP (SETUP mode).
R/W	ACC 1	Display changes to the first entry in the setup parameter list, ACC 1 (Acceleration time #1).
▽	dEC 1 : : UL	Assume we want to change upper limit frequency to 70.0 Hz. Pressing the U/D keys scrolls through the list of setup parameter titles until UL is displayed.
R/W	60.0	Pressing R/W selects the currently displayed parameter and displays its current setting value.
△ (press and hold)	XX.X	Setting value increases.
Release up key	70.0	Releasing the up key causes the setting value to stop increasing. The data will flash to indicate that the displayed value (RAM) has been changed from the non-volatile memory value.
R/W	UL↔70.0	When the read/write key is pressed, the parameter name, UL, and the new setting value will be alternately displayed to indicate that the new setting value has been written to memory. After two alternating display cycles, the display will return to setup mode, with the parameter title UL displayed.

MODE SUMMARY

Setup mode (cont'd)
The following table lists the setup group parameter codes and the corresponding parameter title.

E3 setup parameter titles	Explanation
ACC1	Acceleration time #1
dEC1	Deceleration time #1
UL	Upper limit frequency
LL	Lower limit frequency
SFLY	Local/Remote and Manual/Auto switch on the fly
IuIn	IV input selection
P3	IV reference point #1
F-P3	IV reference point #1 frequency
P4	IV reference point #2
F-P4	IV reference point #2 frequency
tHr1	Motor overload rating
StC1	Stall selection
StL1	Stall level #1
OLM	Motor overload selection
OLt	Motor 110% overload time limit
APL	Application parameters selection
tYP	Standard setting mode
PASS	Pass number

MODE SUMMARY

Program Mode
The program mode is the standard interface for the drive parameters. The parameters are grouped (and blinded) by function for easy reference. To switch to this mode while in standard monitor mode, press the **S/P/M** key twice to select the program mode title PROG and press R/W. To escape from this mode, pushing the **S/P/M** key will switch back to the standard monitor mode. There are three main functions in this mode: the parameter display and setting function described below, displaying and changing user changed parameters (page 7-8), and the analog output adjustment function (page 7-9).

Program mode - parameter display and setting function
To change parameter settings, perform the following process:

1. Switch to program mode
2. At the group title display, switch to the parameter's group name by using the U/D keys. Press R/W key.
3. At the parameter title display, switch to the desired parameter by using the U/D keys. Press R/W key.
4. When the data is displayed, change it by using the U/D keys.
5. Press R/W key to write the data to the E^2PROM

Example of changing the setting for acceleration time #1 to 20s (assuming power has just been applied to the inverter):

Key Operation	LED Message	Explanation
	0.0	Standard monitor mode (current output frequency displayed)
S/P/M	SEtP	Switch to mode selection menu.
S/P/M	PrOG	Select program mode title with U/D keys.
R/W	Gr.U	Select program mode by pressing R/W key. First program group title is displayed.
U/D	Gr.F	Select desired group title using the U/D keys.
R/W	FH	Enter parameter group by pressing the R/W key. First parameter title in the group is displayed.
U/D	ACC 1	Select desired parameter using the U/D keys
R/W	10.0	Read parameter setting value by pressing the R/W key.
U/D	20.0	Adjust setting value to desired value.
R/W	ACC 1↔20.0	Write new setting value to memory by pressing the R/W key. The parameter title and the new setting value will flash alternately for two cycles. Then the title Acc1 is displayed.
	ACC 1	Display returns to program mode (parameter title display).

Setting other parameters is possible by performing the same process. Optionally, at this point, the S/P/M key will exit back to standard monitor mode.

MODE SUMMARY

Program mode (cont'd)
The following table lists the parameter group codes and the corresponding group content.

E3 LED message	Group contents	Blind/Unblind default
Gr.U	Parameters changed from factory default settings	Unblinded
Gr.F	Fundamental inverter operation parameters #1	Unblinded
Gr.F2	Fundamental inverter operation parameter #2.	Blinded
Gr.Pn	Panel control parameters	Blinded
Gr.St	Terminal block selection parameters	Unblinded
Gr.SC	Special control parameters	Unblinded
Gr.SF	Frequency setting parameters	Blinded
Gr.Pr	Protection function parameters	Unblinded
Gr.Pt	Pattern run control parameters	Blinded
Gr.Fb	Feedback control parameters	Unblinded
Gr.tr	Communication parameters	Unblinded
Gr.01	Pump application macro	Unblinded
Gr.02	Fan application macro	Unblinded
Gr.03	Cooling tower application macro	Unblinded
Gr.AM	AM/FM output terminal adjustment parameters	Unblinded
Gr.Ut	Utility parameters	Unblinded
Gr.Mt	Motor rating parameters	Blinded

Gr.U is always displayed. But only the parameters different from factory settings are displayed in Gr.U. The parameters in this group can be changed in this group when they are displayed. However, when a parameter's setting is once again set to the factory setting, it will be deleted from this parameter group.

Gr.Ut: By the use of the "BLIND" function in this group, parameter groups which do not need to be adjusted can be prevented from being displayed.

The upper menu and lower menu and skip functions are used as follows: when an upper menu parameter is not selected "ON", its lower menu parameters are not necessary, and therefore not displayed. Only when an upper menu parameter is selected "ON" (in other words, a setting other than the standard setting) will its corresponding lower menu items be displayed.

MODE SUMMARY

Program Mode - Viewing contents of Gr.U (user changed parameter group)
The parameter group Gr.U contains only those parameters which the user has changed from the default factory settings. The messages displayed when viewing parameters in this group are identical to those displayed when viewing the parameters in their standard groups with one exception. When viewing parameters in standard groups, there is no delay when moving from one parameter title display to the next parameter title display. However, when viewing the user changed parameter group, there can be a time delay between parameter title displays. During this time delay the inverter will flash Gr.U on the LED display to indicate that the inverter is searching for user changed parameters. The following is an example of viewing parameters in Gr.U when only the FH setting and AMSL are changed from the factory default settings.

Key Operation	LED Message	Explanation
	0.0	Standard monitor mode.
S/P/M	SEtP	Switch to mode selection menu.
S/P/M	PrOG	Select program mode title with S/P/M keys.
R/W	Gr.U	Enter program mode by pressing the R/W key. User changed parameter group title is displayed.
R/W	FH	Enter user changed parameter group by pressing the R/W key. First user changed parameter title is displayed.
R/W	Gr.U *flashing*	View next user changed parameter title by pressing the down key. The display will flash Gr.U to indicate that the drive is searching for the next user changed position.
	AMSL	Next user changed parameter title is displayed.

Pressing the **S/P/M** button will exit from viewing the user changed parameter group back to standard monitor mode. Additionally, if there are NO parameters changed from the factory default settings, the inverter will not find any parameters to display in the user changed parameter group. After the entire parameter set has been searched and no parameters found, the inverter will display the next parameter group title: Gr.F. The following is an example of this operation (no parameters changed from factory default settings):

Key Operation	LED Message	Explanation
	0.0	Standard monitor mode
S/P/M	SEtP	Switch to mode selection menu.
S/P/M	PrOG	Select program mode title with S/P/M keys.
R/W	Gr.U	Enter program mode by pressing the R/W key. User changed parameter group title is displayed.
R/W	Gr.U *flashing*	The display will flash Gr.U to indicate that the drive is searching for the next user changed position.
	Gr.F	Upon finding no user changed parameters, the drive will display the first parameter group title.

MODE SUMMARY

Program mode - analog meter adjustment function
The AM and FM programmable analog output terminals have a coefficient that can be adjusted by the user to obtain the desired output voltage (current) corresponding to the selected input variable. The following adjustment procedure can be used to adjust the output of the FM terminal to 5Vdc at base frequency.

Key Operation	LED Message	Explanation
	0.0	Standard monitor mode.
S/P/M	SEtP	Switch to mode selection menu.
S/P/M	PrOG	Select program mode title with S/P/M keys.
R/W	Gr.U	Enter program mode by pressing the R/W key. User changed parameter group title is displayed.
U/D	Gr.AM	Select AM/FM adjustment parameter group.
R/W	FMSL	Enter AM/FM adjustment parameter group by pressing R/W. First parameter title is displayed.
U/D	FM	Select the FM adjustment parameter with the U/D keys.
R/W	60.0	The current output frequency will be displayed (not the parameter setting value).
U/D	60.0	Adjust the setting value with the U/D keys until the analog output matches the desired level. Although the setting value is changing, the displayed value of output frequency will not change.
R/W	FM↔60.0	The display value and parameter title will alternately flash for two cycles.
	FM	The display will then return to program mode with the parameter title displayed.

Program mode - settings alarm displays
Maximum value alarm - For all parameters, if the setting value exceeds the parameter's maximum value, the maximum value alarm is activated. For example, if the user attempts to increase the maximum output frequency above 400Hz, the following message will be displayed:

Key Operation	LED Message	Explanation
	FH	Program mode showing the parameter title display (maximum output frequency).
R/W	80.0	Program mode (showing the setting value of maximum output frequency).
UP	400.0	The user adjusts the setting value to its maximum allowable value.
UP	H I↔400.0	If the user attempts to increase the parameter value above the maximum limit, the alarm is displayed in the parameter data field. The warning message and the maximum limit data are alternately displayed for two cycles.
	400.0 *flashing*	The display returns to the setting value display mode.

Minimum value alarm - For all parameters, if the setting value exceeds the parameter's minimum value, the warning "LO" and the minimum value will be alternately displayed for two cycles as in the case for the maximum warning.

In pattern run mode, the operating frequency is limited to the UL and LL. Parameter settings that exceed these limits cannot be input.

MODE SUMMARY

Program mode - setting alarm displays (cont'd)
If, while changing a parameter setting, its value causes the alarm to occur, pushing the U/D keys for a moment will cause the value to change discontinuously. For example, when the UL frequency is exceeded, the value will be set to the upper limit value. When the LL is exceeded the value will be set to the lower limit value. Because the E^2PROM data has not been changed yet, it is necessary to perform a write operation.

Alarm display example: (UPPER LIMIT=60Hz, and LOWER LIMIT=40Hz)
This example considers the case when, after setting upper limit to 60Hz, an attempt is made to change a pattern run operating frequency in the Gr.SF group that was previously set to 80.0Hz (assume starting from program mode, and Gr.SF is unblinded).

Key Operation	LED Message	Explanation
	Gr.U	Switch to program mode, group title display.
U/D	Gr.SF	Select FREQUENCY SETTING PARAMETERS parameter group with the U/D keys.
R/W	FC 1	Group determined. First parameter in selected group is displayed.
U/D	FSor	Select parameter “PRESET SPEED #1 FREQUENCY” with the U/D keys.
R/W	80.0	Displays current setting for PRESET SPEED #1.
U/D	60.0 (HI)	PRESET SPEED #1 is changed to upper limit frequency directly. The maximum value alarm message will flash in the data field for two cycles. After two cycles, the data “60.0Hz” will continue to flash.
Down	40.0 (LO)	The setting value will decrease until it attempts to go below 40.0Hz. At that time, the minimum value alarm message will flash in the data field for two cycles. After two cycles, only the data will flash..

Program mode - panel lockout mode cancellation
It is possible to disable all key input by setting the parameter PMOd to 0. To cancel this condition, use the following procedure to enter the pass number which is selectable from 0 - 99 (see page 8-33 Item 314 (PASS) in **Utility Parameters** Gr.ut.. Assume starting in panel operation disabled condition:

Key Operation	LED Message	Explanation
	0.0	Panel locked out condition (no keys valid)
L/R + UP + S/P/M + R/W	0	Special key sequence allows user to enter pass number even when all other key input is disabled.
U/D	55	Use the U/D keys to input the pass number.
R/W	PASS	If the pass number entered is correct, the user will have access to all normal panel operations. If not, ERR will be displayed.
	0.0	The display will automatically change back to standard monitor mode after a few seconds.

MODE SUMMARY

Status Monitor Mode

In status monitor mode, it is possible to monitor the inverter status (frequency command, output voltage, current, terminal information, etc.). Status monitor mode is entered by pressing the S/P/M key, then selecting MOn at the mode selection menu and pressing the R/W key. The following example details the procedure for entering status monitor mode (from standard monitor mode) and viewing all the monitored status variables. The present output frequency (which, just after power is applied, is 0.0) is displayed. (If the ST-CC terminals are not shorted, "OFF" will be displayed).

Key Operation	LED Message	Explanation
	0.0	Standard monitor mode
S/P/M	SEtP	Switch to mode selection menu.
S/P/M	PrG	
S/P/M	MOn	Select status monitor mode title with U/D keys.
R/W	Fr-F	Enter status monitor mode by pressing R/W. First monitor item (motor run direction) is displayed.
DOWN	60.0	Pressing UP/DOWN views next/previous status variable. Frequency command value displayed (monitor #1)
DOWN	C 0	Load current (%) monitor (monitor #2)
DOWN	V 228	Input voltage (V) monitor (monitor #3)
DOWN	P 0	Output voltage (V) monitor (monitor #4)
DOWN	A.....1	Input terminal status monitor (see page 11-8)
DOWN	b.....1	Input terminal status monitor (see page 11-8)
DOWN	O.....1	Output terminal status monitor (see page 11-8)
DOWN	t0.00	Total RUN time monitor
DOWN	OC1	Past trip #1 monitor
DOWN	OC2	Past trip #2 monitor
DOWN	OC3	Past trip #3 monitor
DOWN	nErr	Past trip #4 monitor
DOWN	Fr-F	Return to the top menu item

In the above mentioned operation, if the UP/DOWN key is pressed continuously, every 0.5sec the next/previous item will be displayed. As optional points, RUN, STOP, displaying the frequency status, and switching to local/remote and manual/auto modes can be performed.

It is possible to monitor four selectable inverter status variables in status monitor mode (numbered Monitor #1 - Monitor #4 in the table above). The monitored variables are selectable from a list of 18 possible variables (see page 8-33 Item 319 MOn1 in **Utility Parameters** Grut). The status variables shown in this table are the default monitored values.

MODE SUMMARY

Status Monitor Mode (cont'd)
During pattern run, the following pattern run status elements will appear as the first 4 monitor elements in status monitor mode.

Key Operation	LED Message	Explanation
	30.0	Output frequency (standard monitor mode)
S/P/M	SEtP	
S/P/M	PrG	
S/P/M	MOn	
R/W	Pt 13	Indicates the currently active pattern group number and pattern speed
Down	n 145	Indicates the number of pattern group repetitions remaining
Down	Sr 12	Indicates the number of the preset speed being used
Down	2365	Indicates the remaining pattern time (seconds or minutes)
Down	Fr-F	Advances to the remainder of the status monitor mode elements as previously outlined.

Before pattern run has been started or once pattern run has been completed, the displays of the pattern run monitor elements in status monitor mode will revert to the following:

Key Operation	LED Message	Explanation
	0.0	Output frequency (standard monitor mode)
S/P/M	SEtP	
S/P/M	PrG	
S/P/M	MOn	
R/W	Pt--	Indicates no currently active pattern group number or pattern speed
Down	n---	Indicates no pattern group repetitions remaining
Down	Sr--	Indicates no preset speed being used
Down	----	Indicates no pattern time remaining. Note: This display will also appear as shown here when "non-stop (continue until STOP command)" or "continue until next step command" is selected as the speed's continue mode in the Pattern Run Control Parameters group.
Down	Fr-F	Advances to the remainder of the status monitor mode elements as previously outlined.

When the drive is tripped, the first item displayed in status monitor mode is the output frequency at the time of the trip. The message is displayed as follows:

Key Operation	LED Message	Explanation
	60.0	Output frequency (standard monitor mode)
(inverter trips)	OC3	Inverter trips and displayed message changes to trip title
S/P/M	SEtP	
S/P/M	PrG	
S/P/M	MOn	
R/W	60.0	When the drive is tripped, the first item displayed in status monitor mode is the output frequency at the time of trip.

MODE SUMMARY

Status Monitor Mode (cont'd)
When the drive is initially powered on, two additional LED test (LED test) displays exist in status monitor mode. After any TYP reset, these two test displays cease to exist. The test displays appear as follow:

Key Operation	LED Message	Explanation
	Fr-F	Motor direction selection (status monitor mode)
Up	(all discrete LED's lit)	discrete LED test display
Up	8.8.8.8	LED segment test display

JOG Run Mode
JOG run mode can be entered only when the drive is in local frequency and manual run/stop control mode and the JOG frequency is set to a value not equal to zero. JOG mode can be entered with the following procedure (assume starting in local control mode from standard monitor mode and JOG frequency equal to 5.0Hz):

Key Operation	LED Message	Explanation
	0.0	Standard monitor mode
S/P/M	SEtP	S/P/M key enters mode selection menu.
S/P/M	PrOG	Enter program mode.
S/P/M	MOn	Enter monitor mode.
S/P/M	FJOG	When S/P/M is pressed a fourth time, the drive enters forward JOG mode (FJOG ≠ 0.0 Hz only).
Down	rJOG	Use the U/D keys to switch between forward/reverse JOG mode.
RUN	5.0	When the RUN key is pressed, the inverter starts a JOG run at the JOG frequency selected.
Release RUN	rJOG	When the RUN key is released the JOG run will stop according the stop method selected. To continue JOG run, press RUN.
S/P/M	0.0	S/P/M key returns to standard monitor mode

COMMAND INSTRUCTIONS

Operating Mode Switching
The E3 drive series allows operating mode switching anytime (it is not necessary to stop the drive). Operating mode switching is performed with the LOCAL/REMOTE and MANUAL/AUTO keys. When power is applied to an inverter, if the command mode selection is not changed from its default setting, the drive will default to terminal (frequency and run/stop) control mode. To change from local frequency control to remote frequency control, or vise versa, press the L/R key.

CAUTION: If the inverter is running at 0 Hz, and the Local/Remote key is pushed, the frequency command input will be switched to a source that may be set for a none-zero frequency command, and the motor may begin turning without any other key pressed.

Run/Stop Commands
Run/stop commands from the LED operation panel are valid for the following settings of the **CMOD** parameter:
(O=permissible, X=not permissible)

CMOd = 0	X
CMOd = 1	X
CMOd = 2	O
CMOd = 3	X
CMOd = 4	O

Run/stop commands are entered with the RUN and STOP keys.

Emergency off
The emergency off command can be executed in auto mode and in local mode. Because this command is compulsory, it cannot be prohibited by setting the CMOd parameter. Since the emergency off command is regarded as a past fault, it will be saved as such.

Emergency off command consists of pressing the STOP/RESET key twice. The procedure and the display message are different for manual and auto mode.

In auto mode, the emergency off command is executed with the following procedure (assume starting in terminal control mode with the inverter running):
The first time STOP/RESET key is pressed, emergency off command prompt "EOFF" will be displayed. If within two seconds, the STOP/RESET key is pressed a second time, the emergency off command will be issued with "E" displayed.

Key Operation	LED Message	Explanation
	60.0	Standard monitor mode.
STOP/RESET	EOFF *flashing*	When STOP/RESET key is pressed, the emergency off prompt is displayed and will flash.
STOP/RESET	E *flashing*	When STOP/RESET key is pressed a second time, the emergency off command is issued and E will be displayed and continue flashing.

If within two seconds, STOP/RESET is not pressed a second time, the emergency off command will be aborted and the display will return to the standard monitor mode.

In manual mode, the emergency off command is similar with that of auto mode. The first time STOP/RESET key is pressed, it will be treated as a regular stop command. Therefore, there is no "EOFF" display. If STOP/RESET key is pressed a second time within one second, the press will be treated as emergency off command and E will be displayed and will be continuously flashing. If STOP/RESET key is not pressed within one second, no emergency off command will be issued.

COMMAND INSTRUCTIONS

Trip Clear Command
A trip clear can be performed after the cause of the trip has been removed. To perform a trip clear, either switch off power to the inverter or use the following procedure:

Key Operation	LED Message	Explanation
	E *flashing*	In standard monitor mode (displaying the flashing trip title)
STOP/RESET	CLr	Trip clear prompt
STOP/RESET	0.0	When STOP/RESET is pressed the trip is cleared and the display returns to standard monitor mode.

If any key other than the STOP/RESET key is pressed at the trip clear command prompt, the trip clear command is aborted and the display returns to standard monitor mode (where the trip title will be displayed flashing). The trip clear command does not clear the recorded past faults.

Standard Setting Selections
Standard setting selections are performed by selecting the tYP parameter in Gr.UE. By selecting the standard setting mode settings (see below), the inverter parameters will automatically be configured. The TYP parameter has the following options:

TYP = 0 No effect

TYP = 1 50Hz standard operation, maximum output frequency, base frequencies, upper limit frequency, all terminal input reference point #2 frequencies, and commercial power/ inverter switching frequency are set for 50Hz operation.

TYP = 2 60Hz standard operation, maximum output frequency, base frequencies, upper limit frequency, all terminal input reference point #2 frequencies, and commercial power/ inverter switching frequency are set for 60Hz operation.

TYP = 3 Standard factory-shipped conditions (sets all parameters except those in Gr.AO to their factory-shipped values). ***THIS CLEARS ALL PAST TRIPS.***

TYP = 4 Trip history clear (only past trips are cleared)

TYP = 5 Saves user-set parameters

TYP = 6 Standard user-set conditions (sets all parameters to the user saved settings)

TYP = 7 Initialize inverter typeform (Used to reset a EtYP error.)

When the tYP command is executed, the display will blank for a short time, after which In It will be displayed. After the settings have been automatically updated, the inverter will return to standard monitor mode.

RETRY, DAMPER, FIRE SPEED

Retry

When the rtt parameter is set to a value not equal to zero, if an overcurrent, overvoltage, or overload trip occurs during operation, the inverter will trip, and the retry sequence will begin. The retry sequence will repeatedly attempt to restart the motor, and if normal operation can be achieved and last for one second, the inverter will switch to standard monitor mode, and operation will continue from there. However, if within the set number of retry attempts, the inverter cannot be restarted, it will remain tripped, and the standard trip message will be shown. The following sequence is an example of the automatic retry function attempting to restart after an overcurrent during operation trip:

Key Operation	LED Message	Explanation
Because this function activates automatically, no key input is necessary	60.0	In standard monitor mode running at 60Hz.
	OC3	When a trip occurs, the trip message is displayed.
	rtry *flashing*	The "rtry" message and the output frequency will be alternately displayed during the retry attempt. The inverter will restart at the current motor rotational speed.
	10.0	
	60.0	If the retry is successful, the output frequency is displayed and the retry message is removed.

Damper Function

This function is used to turn on the damper before the motor runs and turn off damper after motor stops.The function is selected by both assigning code 55 (damper status input 0:damper closes, 1: damper open) to an input terminal and assigning 64 or 65 (open damper 64/65: positive/ negative logic) to an output terminal. Unless both are assigned, the damper function will not work.

If "damper status" is assigned to an input terminal and "open damper" is assigned to an output terminal, damper will work in the following way:
Whenever a run command is issued, "open damper" signal is sent out to the assigned output terminal. A wait occurs until "damper status" changes to 1 (means damper open full) and motor turns on. If a stop command is issued, "open damper" will be cleared (means to close damper) after the motor stops. During a deceleration, if another run command is issued, the motor should run immediately because the damper is still open. If "damper status" input becomes 0 (means the damper closes) while the motor is running, it drive trips and flashes "dAMP". The damper trip is non-retriable. If any inverter trip occurs, after motor stops, the damper will be closed.

Fire speed Function

This function is used to automatically start a motor at the preset speed and forward direction in case of fire. If fire status input is assigned to an input terminal (default assignment to S1 input terminal) and the inverter is not in trip, then whenever fire is detected, a run command at forward direction and the speed set by Item 131 (FSor) will be issued. Fire speed run command has the highest priority besides drive trip. In a fire situation, the motor can not be stopped by STOP command from anywhere. Before the fire signal goes off, the motor can only be stopped by a drive trip. If the fire signal is not cleared, after trip is cleared, the motor automatically will start to run again at fire speed. If any trip occurs, the motor will stop. Remember that the fire speed run command is only a run command but with the highest priority. If the damper function is also working, after the fire speed run command is issued, the first thing to do is to open the damper. The motor will not run until a "damper open full" signal is received.

Fire speed is selected by default. The default setting for fire status input is input terminal S1. The fire status input can be assigned to any input terminal by setting input terminal function to code 56. Fire speed can be set by Item 131 (FSor). Fire speed is limited by setting the upper and lower limit frequency in Item 4 (LL) and Item 3 (UL)

DETAILED MESSAGE DESCRIPTION

Status Monitor Messages
The following table lists all possible messages that can be displayed regarding drive status monitor items.

LED Message	Explanation
60.0	When the drive is tripped, the first item displayed in status monitor mode is the output frequency at the time the drive tripped.
Pt 10	Currently active pattern group number and pattern speed. If the drive is not running, the group and speed numbers will appear as “Pt -.-”.
n 145	Number of pattern group repetitions remaining. If the drive is not running, the number of cycles remaining will appear as “n- - -”
Sr02	Number of the preset speed being used. If the drive is not running, the preset speed number will appear as “Sr.- -”
235	Remaining pattern time (s / min). If the drive is not running, the remaining time will appear as “- - - -“
Fr-F	Motor run direction monitor (forward)
Fr-r	Motor run direction monitor (reverse)
60.0	The post-compensation output frequency monitor appears as a frequency display only.
60.0	The frequency command monitor appears as a frequency display only.
C 20	Load current (%/A) monitor
V230	Input voltage (V/%) monitor
P230	Output voltage (V/%) monitor
q 0	Torque current (%/A) monitor
E 0	Excitation current (%/A) monitor
d 0	PID feedback value (Hz) monitor
L 0	Motor overload ratio (%) monitor
O 0	Inverter overload ratio (%) monitor
r 0	Dynamic braking resistor overload ratio (%) monitor
h 0.0	Input power (kW) monitor
H 0.0	Output power (kW) monitor
J 0	RR terminal selectable input value monitor
C 120	Peak load current (%/A) monitor (peak since last RUN command)
u240	Peak input voltage (V/%) monitor (peak since last RUN command)
U99.9	KWH monitor. If the value is less than 4 decimal digits long, display the "U" in the front. If the value is 4 decimal digits long, no display of "U"
M999	MWH monitor. If the value is less than 4 decimal digits long, display the "M" in the front. If the value is greater than 3 decimal digits long, no display of "M". If the value is also greater than 9999 in decimal, then "9999" will be displayed.

(table cont'd on following page)

DETAILED MESSAGE DESCRIPTION

Status Monitor Messages (cont'd)
The following table lists all possible messages that can be displayed regarding drive status monitor items.

LED Message	Explanation
A....	Input terminal status monitor (see page 11-8)
b....	Input terminal status monitor (see page 11-8)
O....	Output terminal status monitor (see page 11-8)
t0.00	Total inverter RUN time monitor
OC1 *	Past trip #1 monitor
OC2 *	Past trip #2 monitor
OC3 *	Past trip #3 monitor
OP1 *	Past trip #4 monitor
8.8.8.8	LED module character generator test display
(all discrete LEDs lit)	Discrete LED test

* Displayed values will vary depending on existing drive conditions and monitor settings that existed at the time of trip.

DETAILED MESSAGE DESCRIPTION

Inverter Trip Codes
The following is a list of all trip messages (trip causes) and a brief description on each.

LED Message	Explanation
nErr	Displayed in the trip history in standard monitor mode when no trip has been recorded since the last inverter reset or trip clear.
OC1	Overcurrent during acceleration trip
OC2	Overcurrent during deceleration trip
OC3	Overcurrent during normal (constant speed) run trip
OC1P	Overcurrent in DC section during acceleration trip
OC2P	Overcurrent in DC section during deceleration trip
OC3P	Overcurrent in DC section during normal (constant speed) run trip
OCL	Load end over current trip detected at start-up (output terminals, motor wiring, etc.)
OCA1	U-phase short circuit trip detected at start-up
OCA2	V-phase short circuit trip detected at start-up
OCA3	W-phase short circuit trip detected at start-up
OP1	Overvoltage during acceleration trip
OP2	Overvoltage during deceleration trip
OP3	Overvoltage during normal (constant speed) run trip
OLIn	Inverter overloaded trip
OLMt	Motor overloaded trip
OCr	Dynamic braking resistor overcurrent trip
OLr	Dynamic braking resistor overload trip
OH	Inverter overheat trip
E	Emergency off trip message. Displayed after the STOP/RESET key has been pressed once when in auto control mode, or press STOP/RESET key twice within one second in manual control mode.
EEP1	EEPROM failure during write cycle
EEP2	EEPROM abnormality during initial reading
Err2	RAM error
Err3	ROM error
Err4	CPU error
Err5	Communication interruption error
Err6	Gate array error
Err7	Output current detection circuit error
Err8	Option PCB error trip
Err9	Option ROM error
UC	Low operating current trip
UP1	Main circuit undervoltage trip
Ot	Overtorque trip
EF1	Software detected earth fault trip
EF2	Hardware detected earth fault trip
Etn	Auto-tuning error
EtYP	Inverter typeform and EEPROM typeform mismatch error
dAMP	Damper trip. When damper function is selected, and damper is closed while the motor is running.
LOSS	IV analog input loss. Valid when LA15 =3 and frequency command is selected from IV analog input terminal.

DETAILED MESSAGE DESCRIPTION

Non-Trip Messages

The following is a list of non-trip causing messages (these items are not recorded in fault history) and a brief description of each.

LED Message	Explanation
OFF	Displayed whenever the ST-CC connection is open.
POFF	Displayed when the inverter control power supply voltage is too low.
NOFF	Displayed when the inverter's main DC bus voltage is low.
rtry	Auto-restart message: alternately displayed with the output frequency whenever the inverter tries to automatically restart after a non-critical trip.
Err1	Displayed when 2 frequency points (F-P1,F-P2,etc.) are set too close to each other.
Clr	Displayed during a pending clear command (after the STOP/RESET key has been pressed once after a trip).
EOFF	Displayed during a pending emergency off command (after the STOP/RESET key has been pressed once when in terminal control mode).
CtrL	Displayed during a pending coast stop command (after the Local/Remote key has been pressed once when in local control mode while the inverter is running).
HI	This maximum value warning message "HI" will be alternately displayed in the data field of a parameter when an attempt is made to increase the setting value greater than the parameter's maximum value.
LO	This minimum value warning message "LO" will be alternately displayed in the data field of a parameter when an attempt is made to decrease the setting value less than the parameter's minimum value.
PASS	Displayed if the correct pass number is entered at the pass number prompt.
Err	Displayed if an incorrect pass number is entered at the pass number prompt.
E1	Displayed when the inverter unit attempts to display a number that exceeds four numerical digits.
db	Displayed when DC injection braking is being executed
dbon	Displayed when motor shaft stationary control is being executed.
FJOG	Displayed when in forward JOG mode.
rJOG	Displayed when in reverse JOG mode.
L	Inverter/motor overload pre-alarm display.
C	Overcurrent pre-alarm display.
P	Overvoltage pre-alarm display.
H	Overheat pre-alarm display.
t	Option board communication alarm display.
InIt	Displayed when the inverter unit is initializing values during resetting/power-up.

SETUP MODE

SEtP SETUP MODE PARAMETERS

DISPLAY	ITEM NO.	PARAMETER DESCRIPTION	ADJUSTMENT RANGE	DISPLAY RESOLUTION	FACTORY SETTING	PAGE NO.
ACC 1	1	Acceleration time #1	0.1 - 6000s/0.01 - 600.0s	0.1s/0.01s	60.0	9-1
dEC 1	2	Deceleration time #1	0.1 - 6000/0.01 - 600.0	0.1s/0.01s	60.0	9-1
UL	3	Upper limit frequency	0.0 Hz - FH	0.01/0.1 Hz	60.0	9-1
LL	4	Lower limit frequency	0.0 Hz -UL	0.01/0.1 Hz	0.0	9-1
SFLY	5	Switch on the fly	0: Off 1: On	-	0	9-1
Iv In	6	IV input selection	0: Standard 1: Adjustable *	-	1	9-1
P3	7 *	IV reference point #1	0 - 100	1%	20	9-1
F-P3	8 *	IV point #1 frequency	0 - FH (max. freq.)	0.1/0.01 Hz	0.0	9-1
P4	9 *	IV reference point #2	0 - 100	1%	100	9-1
F-P4	10 *	IV point #2 frequency	0 - FH (max. freq.)	0.1/0.01 Hz	60.0	9-1
tHr 1	11	Electronic thermal protection level #1	10 - 100 % /A	1%/A	100	9-2
StC 1	12	Stall protection enable #1	0: On ** 1: Off	-	0	9-2
StL 1	13 **	Stall protection #1 current limit adjustment	10 - 215%/A	1%/A	110	9-2
OLM	14	OL selection	0: Standard - 1: Soft stall On 2: OLMt trip Off 3: Soft stall On, OLMt trip Off	-	1	9-2
OLt	15	Motor 110% overload time limit	10 - 2400	10 sec	600	9-2
APL	16	Industrial application parameters selection	0: Does nothing 1: Pump application 2: Fan application 3: Cooling tower application 4: Hoist application 5: Textiles application 6: Machine tool application	-	0	9-2
tYP	17	Standard setting mode selection	0: Does nothing 1: 50 Hz setting 2: 60 Hz setting 3: Factory setting 4: Trip history clear 5: Save user-settings 6: Reset to saved user-settings 7: Initialize drive typeform	-	0	9-2
PASS	18	Pass number	0 - 99	-	0	9-2

*Item 7 through 11 is available only when Item 6 Adjustment Range option 1 is selected.
**Item 13 is available only when Item 12 Adjustment Range option 0 is selected.

PROGRAM MODE

GrF FUNDAMENTAL PARAMETERS #1

DISPLAY	ITEM NO.	PARAMETER DESCRIPTION	ADJUSTMENT RANGE	DISPLAY RESOLUTION	FACTORY SETTING	PAGE NO.
FH	19	Maximum output frequency	30 - 400 Hz	0.01/0.1 Hz	80 Hz	9-3
uL1	20	Base frequency #1	25 - 400 Hz	0.01/0.1 Hz	60 Hz	9-3
uLSL	21	Base frequency voltage selection	0: Input voltage level 1: Automatic setting 2: Stationary setting	-	1	9-3
uLu1	22	Maximum voltage #1 for 230V Maximum voltage #1 for 460V	0 - 255V 0 - 510V	1V 1V	230V 460V	9-3 9-3
dISr	23	Reverse operation disable selection	0: Reverse allowed 1: Reverse not allowed	-	0	9-3
UL	24	Upper limit frequency	0.0 Hz - FH	0.01/0.1 Hz	60.0	9-3
LL	25	Lower limit frequency	0.0 Hz -UL	0.01/0.1 Hz	0.0	9-3
Pt	26	V/F pattern	1: Constant torque * 2: Variable torque * 3: Automatic torque boost 4: Automatic torque boost with automatic energy saving 5: Vector control 6: Vector control with automatic energy saving	-	2	9-3
ub1	27 *	Voltage boost #1 for all drives	0 - 30%	0.1%	1%	9-3
ACC1	28	Acceleration time #1	0.1 - 6000s/0.01 - 600.0s	0.1s/0.01s	60.0	9-4
dEC1	29	Deceleration time #1	0.1 - 6000/0.01 - 600.0	0.1s/0.01s	60.0	9-4
SCu1	30	Acc/Dec pattern #1	0: Linear 1: Self-adjusting 2: S-Pattern #1 3: S-Pattern #2	-	0	9-4
SCL	31	Acc/Dec pattern adjustment amounts (low)	0 - 50	1%	25	9-4
SCH	32	Acc/Dec pattern adjustment amounts (high)	0 - 50	1%	25	9-4

*Item 27 is available only when Item 26 Adjustment Range option 1 - 2 is selected.

PROGRAM MODE

Gr.F2 FUNDAMENTAL PARAMETERS #2

DISPLAY	ITEM NO.	PARAMETER DESCRIPTION	ADJUSTMENT RANGE	DISPLAY RESOLUTION	FACTORY SETTING	PAGE NO.
uL2	33	Base frequency #2	25 - 400 Hz	0.01/0.1 Hz	60.0	9-5
uLu2	34	Maximum voltage #2 for 230V Maximum voltage #2 for 460V	0 - 255V 0 - 510V	1V 1V	230V 460V	9-5 9-5
ub2	35	Voltage boost #2 for all sizes	0 - 30%	0.1%	1%	9-5
tHr2	36	Electronic thermal protection level #2	10 - 100 % /A	1%/A	100	9-5
StC2	37	Stall protection enable #2	0: On * 1: Off	-	0	9-5
StL2	38 *	Stall protection #2 current limit adjustment	10 - 215%/A	1%/A	110.0	9-5
ACC2	39	Acceleration time #2	0.1 - 6000s/0.01 - 600.0s	0.1s/0.01s	60.0	9-5
dEC2	40	Deceleration time #2	0.1 - 6000s/0.01 - 600.0s	0.1s/0.01s	60.0	9-5
SCu2	41	Acc/Dec pattern #2	0: Linear 1: Self-adjusting 2: S-Pattern #1 3: S-Pattern #2	-	0	9-5
Ad2F	42	Acc/Dec #1/#2 switching frequency	0 - FH (max. freq.)	0.1/0.01 Hz	0.0	9-5

*Item 38 is available only when Item 37 Adjustment Range option 0 is selected.

PROGRAM MODE

GrPn PANEL CONTROL PARAMETERS

DISPLAY	ITEM NO.	PARAMETER DESCRIPTION	ADJUSTMENT RANGE	DISPLAY RESOLUTION	FACTORY SETTING	PAGE NO.
Fr	43	Forward/reverse	0: Reverse 1: Forward	-	1	9-6
StPP	44	Stop pattern selection	0: Decelerated stop 1: Coast stop	-	0	9-6
PtP	45	Fundamental parameter #1 or #2 selection	1: Fundamental parameter #1 2: Fundamental parameter #2	-	1	9-6
Ad2	46	Acc/dec #1 or #2 selection	1: Acc/dec #1 2: Acc/dec #2	-	1	9-6
PrES	47	Panel reset selection	0: All possible 1: Only OL can be reset 2: Only OL, OC1, OC2, OC3 can be reset	-	0	9-6
PFbC	48	Panel feedback control (PID, speed feedback, drooping)	0: On (valid when panel operation is selected) 1: Off (invalid when panel operation is selected)	-	0	9-6
SFLY	49	Switch on fly	0: Off 1: On	----	0	9-6

PROGRAM MODE

Gr.St TERMINAL SELECTION PARAMETERS

DISPLAY	ITEM NO.	PARAMETER DESCRIPTION	ADJUSTMENT RANGE	DISPLAY RESOLUTION	FACTORY SETTING	PAGE NO.
It	50	Input terminal selection	0: Standard terminal functions 1: Individual selection *	-	1	9-7
It0	51 *	Input terminal 0(R)	0 - 56 **	-	0	9-7
It1	52 *	Input terminal 1(S1)	0 - 56 **	-	56	9-7
It2	53 *	Input terminal 2(S2)	0 - 56 **	-	13	9-7
It3	54 *	Input terminal 3(S3)	0 - 56 **	-	3	9-7
It4	55 *	Input terminal 4(S4) ****	0 - 56 **	-	10	9-7
It5	56 *	Input terminal 5(F)	0 - 56 **	-	5	9-7
It6	57 *	Input terminal 6(RES)	0 - 56 **	-	6	9-7
It7	58 *	Input terminal 7(ST)	0 - 56 **	-	7	9-7
It8	59 *	Input terminal 8(S5)	0 - 56 **	-	8	9-7
It9	60 *	Input terminal 9(S6)	0 - 56 **	-	9	9-7
It10	61 *	Input terminal 10(S7)	0 - 56 **	-	10	9-7
It11	62 *	Input terminal 11(potential terminal)	0 - 42 **	-	33	9-8
ItF	63	Input terminal R, S1-S7 response time selection	1 - 100	1	6	9-8
It5F	64	Input terminal 5(F) response time selection	1 - 100	1	6	9-8
It6F	65	Input terminal 6(RES) response time selection	1 - 100	1	6	9-8
It7F	66	Input terminal 7(ST) response time selection	1 - 100	1	6	9-8
Ot0	67	Output terminal 0(RCH) function selection	0 - 67***	1	6	9-8
Ot0d	68	Output terminal 0(RCH) delay time	1 - 100	1	1	9-8
Ot0H	69	Output terminal 0(RCH) hold time	1 - 100	1	1	9-8
Ot1	70	Output terminal 1(LOW) function selection	0 - 67***	1	4	9-8
Ot1d	71	Output terminal 1(LOW) delay time	1 - 100	1	1	9-8
Ot1H	72	Output terminal 1(LOW) hold time	1 - 100	1	1	9-8

Table cont'd on next page

*Items 51 -62 are available only when Item 50 Adjustment Range option 1 is selected.
See **Input Terminal Function Selections table on page 9-11 for individual selections 0 - 56.
***See **Output Contacts Function Selections** table on page 9-13 for individual selections 0 - 67.
****Set function is realized when S4 is open to CC rather than closed as in the other input terminals.

PROGRAM MODE

Gr.St TERMINAL SELECTION PARAMETERS (cont'd)

DISPLAY	ITEM NO.	PARAMETER DESCRIPTION	ADJUSTMENT RANGE	DISPLAY RESOLUTION	FACTORY SETTING	PAGE NO.
Ot2	73	Output terminal 2(FL) function selection	0 - 67**	1	10	9-9
Ot2d	74	Output terminal 2(FL) delay time	1 - 100	1	1	9-9
Ot2H	75	Output terminal 2(FL) hold time	1 - 100	1	1	9-9
Ot3	76	Output terminal 3(OUT) function selection	0 - 67**	1	8	9-9
Ot3d	77	Output terminal 3(OUT) delay time	1 - 100	1	1	9-9
Ot3H	78	Output terminal 3(OUT) hold time	1 - 100	1	1	9-9
LF	79	Low-speed signal output frequency	0 - FH (max. freq.)	0.1/0.01 Hz	0.0	9-9
brCH	80	Acc/Dec complete detection bandwidth	0 - FH (max. freq.)	0.1/0.01 Hz	2.5	9-9
HrCH	81	Speed reach HI frequency	0 - FH (max. freq.)	0.1/0.01 Hz	0.0	9-9
LrCH	82	Speed reach LO frequency	0 - FH (max. freq.)	0.1/0.01 Hz	0.0	9-9
CCHG	83	Commercial (incoming) power/inverter switching output	0: Off 1: Automatic switching upon trip 2: Switching at incoming power switching frequency setting * 3: Switching at incoming power switching frequency setting, automatic switching upon trip *	-	0	9-9
FCHG	84 *	Incoming power/inverter switching frequency	0 - FH (max. freq.)	0.1/0.01 Hz	60.0 Hz	9-9
OtFP	85	Output terminal pulse frequency selection	0: 48f 1: 96f 2: 360f	-	0	9-9
Inrr	86	RR input special function selection	0: Standard 1: FH 2: TACC/DEC multiplication factor 3: VB multiplication factor 4: CL multiplication factor	-	0	9-10

*Item 84 is available only when Item 83 Adjustment Range option 2 - 3 is selected.
See **Output Contacts Function Selections table on page 9-13 for individual selections 0 - 67.

PROGRAM MODE

Gr.SC SPECIAL CONTROL PARAMETERS

DISPLAY	ITEM NO.	PARAMETER DESCRIPTION	ADJUSTMENT RANGE	DISPLAY RESOLUTION	FACTORY SETTING	PAGE NO.
F-St	87	Start-up frequency	0.0 - 10	0.1/0.01 Hz	0.1	9-15
F-En	88	End frequency	0.0 - 30	0.1/0.01 Hz	0.1	9-15
Frun	89	Run frequency	0.0 - FH (max. freq.)	0.1/0.01 Hz	0.0	9-15
FHYS	90	Run frequency hysteresis	0.0 - 30	0.1/0.01 Hz	0.0	9-15
FJn	91	Jump frequency enable	0: Function OFF 1: Function ON *	-	0	9-15
FJ1	92 *	Jump frequency #1	0.0 - FH (max. freq.)	0.1/0.01 Hz	0.0	9-15
bFJ1	93 *	Jump frequency band # 1	0 - 30	0.1/0.01 Hz	0.0	9-15
FJ2	94 *	Jump frequency #2	0.0 - FH (max. freq.)	0.1/0.01 Hz	0.0	9-15
bFJ2	95 *	Jump frequency band # 2	0 - 30	0.1/0.01 Hz	0.0	9-16
FJ3	96 *	Jump frequency #3	0.0 - FH (max. freq.)	0.1/0.01 Hz	0.0	9-16
bFJ3	97 *	Jump frequency band # 3	0 - 30	0.1/0.01 Hz	0.0	9-16
CF	98 **	PWM carrier frequency for 230V (3-30 HP) PWM carrier frequency for 460V (5-125 HP)	500 Hz - 15 kHz ** 500 Hz - 15 kHz **	0.1 kHz	2.2 kHz	9-16

*Items 92 -97 are available only when Item 91 Adjustment Range option 1 is selected.

CAUTION

**Setting the drive above 8 KHz requires a derate. Refer to 9-16 for more information.

PROGRAM MODE

Gr.SF FREQUENCY SETTING PARAMETERS

DISPLAY	ITEM NO.	PARAMETER DESCRIPTION	ADJUSTMENT RANGE	DISPLAY RESOLUTION	FACTORY SETTING	PAGE NO.
FC1	99	Frequency priority selection #1	1: RR 2: IV 3: RX 4: PG 5: BIN	-	2	9-17
FC2	100	Frequency priority selection #2	1: RR 2: IV 3: RX 4: PG 5: BIN	-	1	9-17
InF	101	Analog input filter	0: no filter 1: medium filter 2: maximum filter	-	0	9-17
rr In	102	RR input selection	0: Standard 1: Adjustable *	-	0	9-17
P1	103 *	RR input reference point #1	0 - 100	1%	0	9-17
F-P1	104 *	RR point #1 output frequency	0 - FH (max. freq.)	0.1/0.01 Hz	0.0	9-17
P2	105 *	RR input reference point #2	0 - 100	1%	100	9-17
F-P2	106 *	RR point #2 output frequency	0 - FH (max. freq.)	0.1/0.01 Hz	80.0	9-17
Iv In	107	IV input selection	0: Standard 1: Adjustable **	-	1	9-18
P3	108 **	IV input reference point #1	0 - 100	1%	20	9-18
F-P3	109**	IV point #1 output frequency	0 - FH (max. freq.)	0.1/0.01 Hz	0.0	9-18
P4	110 **	IV input reference point #2	0 - 100	1%	100	9-18
F-P4	111 **	IV point #2 output frequency	0 - FH (max. freq.)	0.1/0.01 Hz	60.0	9-18
rE In	112	RX input selection	0: Standard 1: Adjustable ***	-	0	9-18
P5	113 ***	RX input reference point #1	-100 - 100	1%	0	9-18
F-P5	114 ***	RX point #1 output frequency	-FH - FH (max. freq.)	0.1/0.02 Hz	0.0	9-18
P6	115 ***	RX input reference point #2	-100 - 100	1%	100	9-18
F-P6	116 ***	RX point #2 output frequency	-FH - FH (max. freq.)	0.1/0.02 Hz	80.0	9-18

*Items 103 - 106 is available only when Item 102 Adjustment Range option 1 is selected.
**Items 108 - 111 is available only when Item 107 Adjustment Range option 1 is selected.
***Items 113 - 116 is available only when Item 112 Adjustment Range option 1 is selected.

Table cont'd on next page

PROGRAM MODE

Gr.SF FREQUENCY SETTING PARAMETERS (cont'd)

DISPLAY	ITEM NO.	PARAMETER DESCRIPTION	ADJUSTMENT RANGE	DISPLAY RESOLUTION	FACTORY SETTING	PAGE NO.
PG In	117	PG input selection	0: Standard 1: Adjustable*	-	0	9-18
P7	118*	PG input reference point #1	-100 - 100	1%	0	9-18
F-P7	119*	PG point #1 output frequency	-FH - FH (max. freq.)	0.1/0.02 Hz	0.0	9-18
P8	120*	PG input reference point #2	-100 - 100	1%	100	9-18
F-P8	121*	PG point #2 output frequency	-FH - FH (max. freq.)	0.1/0.02 Hz	80.0	9-18
bI In	122	BIN input selection	0: Standard 1: Adjustable**	-	0	9-18
P9	123**	BIN input reference point #1	0 - 100 %	1%	0	9-18
F-P9	124**	BIN point #1 output frequency	-FH - FH (max. freq.)	0.1/0.02 Hz	0.0	9-18
PA	125**	BIN input reference point #2	0 - 100 %	1%	100	9-18
F-PA	126**	BIN point #2 output frequency	-FH - FH (max. freq.)	0.1/0.02 Hz	80.0	9-18
JOG	127	Jog run frequency	0.0 - 20***	0.1/0.01 Hz	0.0	9-18
JStP	128***	Jog stop control	0: Decelerated stop 1: Coast to stop 2: DC injection braking	-	0	9-18

*Items 118 - 121 are available only when Item 117 Adjustment Range option 1 is selected.
**Items 123 - 126 are available only when Item 122 Adjustment Range option 1 is selected.
***Item 128 is available only when Item 127 Adjustment Range is set to other than "0"

Table cont'd on next page

PROGRAM MODE

Gr.SF FREQUENCY SETTING PARAMETERS (cont'd)

DISPLAY	ITEM NO.	PARAMETER DESCRIPTION	ADJUSTMENT RANGE	DISPLAY RESOLUTION	FACTORY SETTING	PAGE NO.
Sr.n	129	Preset speed selection	0: Disabled 1: 1st speed * 2: 2nd speed * 3: 3rd speed * 4: 4th speed * 5: 5th speed * 6: 6th speed * 7: 7th speed * 8: 8th speed * 9: 9th speed * 10: 10th speed * 11: 11th speed * 12: 12th speed * 13: 13th speed * 14: 14th speed * 15: 15th speed *	-	0	9-18
Sr.A	130 *	Mode selection	0: Deactivated 1: Activated	-	0	9-18
FSor	131 *	1st speed (firespeed)	Lower limit frequency to upper limit frequency	0.1/0.01 Hz	60.0	9-18
SrA1	132 *	1st speed (firespeed) run mode ***Note: Reverse run not available in firespeed run only***	0: Acc/dec #1, V/F #1, forward run 1: Acc/dec #1, V/F #1, reverse run ** 2: Acc/dec #2, V/F #1, forward run 3: Acc/dec #2, V/F #1, reverse run ** 4: Acc/dec #1, V/F #2, forward run 5: Acc/dec #1, V/F #2, reverse run ** 6: Acc/dec #2, V/F #2, forward run 7: Acc/dec #2, V/F #2, reverse run **	-	0	9-19
Sr02	133 *	2nd speed	Lower limit frequency to upper limit frequency	0.1/0.01 Hz	30.0	9-18
SrA2	134 *	2nd speed run mode	***Same options as Item 132***	-	0	9-19
Sr03	135 *	3rd speed	Lower limit frequency to upper limit frequency	0.1/0.01 Hz	0.0	9-18
SrA3	136 *	3rd speed run mode	***Same options as Item 132***	-	0	9-19
Sr04	137 *	4th speed	Lower limit frequency to upper limit frequency	0.1/0.01 Hz	0.0	9-18
SrA4	138 *	4th speed run mode	***Same options as Item 132***	-	0	9-19

*Items 130 - 138 are available only when Item 129 Adjustment Range options 1 - 15 is selected.
** Reverse run not available in 1st speed (firespeed) run mode only.

Table cont'd on next page

PROGRAM MODE

Gr.SF FREQUENCY SETTING PARAMETERS (cont'd)

DISPLAY	ITEM NO.	PARAMETER DESCRIPTION	ADJUSTMENT RANGE	DISPLAY RESOLUTION	FACTORY SETTING	PAGE NO.
SrO5	139 *	5th speed	Lower limit frequency to upper limit frequency	0.1/0.01 Hz	0.0	9-18
SrM5	140 *	5th speed run mode	***Same options as Item 132***	-	0	9-19
SrO6	141 *	6th speed	Lower limit frequency to upper limit frequency	0.1/0.01 Hz	0.0	9-18
SrM6	142 *	6th speed run mode	***Same options as Item 132***	-	0	9-19
SrO7	143 *	7th speed	Lower limit frequency to upper limit frequency	0.1/0.01 Hz	0.0	9-18
SrM7	144 *	7th speed run mode	***Same options as Item 132***	-	0	9-19
SrO8	145 *	8th speed	Lower limit frequency to upper limit frequency	0.1/0.01 Hz	0.0	9-18
SrM8	146 *	8th speed run mode	***Same options as Item 132***	-	0	9-19
SrO9	147 *	9th speed	Lower limit frequency to upper limit frequency	0.1/0.01 Hz	0.0	9-18
SrM9	148 *	9th speed run mode	***Same options as Item 132***	-	0	9-19
Sr 10	149 *	10th speed	Lower limit frequency to upper limit frequency	0.1/0.01 Hz	0.0	9-18
SrMA	150 *	10th speed run mode	***Same options as Item 132***	-	0	9-19
Sr 11	151 *	11th speed	Lower limit frequency to upper limit frequency	0.1/0.01 Hz	0.0	9-18
SrMb	152 *	11th speed run mode	***Same options as Item 132***	-	0	9-19
Sr 12	153 *	12th speed	Lower limit frequency to upper limit frequency	0.1/0.01 Hz	0.0	9-18
SrMC	154 *	12th speed run mode	***Same options as Item 132***	-	0	9-19
Sr 13	155 *	13th speed	Lower limit frequency to upper limit frequency	0.1/0.01 Hz	0.0	9-18
SrMd	156 *	13th speed run mode	***Same options as Item 132***	-	0	9-19

*Items 139 - 156 are available only when Item 129 Adjustment Range options 1 - 15 is selected.

Table cont'd on next page

PROGRAM MODE

Gr.SF FREQUENCY SETTING PARAMETERS (cont'd)

DISPLAY	ITEM NO.	PARAMETER DESCRIPTION	ADJUSTMENT RANGE	DISPLAY RESOLUTION	FACTORY SETTING	PAGE NO.
Sr 14	157 *	14th speed	Lower limit frequency to upper limit frequency	0.1/0.01 Hz	0.0	9-18
SrME	158 *	14th speed run mode	***Same options as Item 132***	-	0	9-19
Sr 15	159 *	15th speed	Lower limit frequency to upper limit frequency	0.1/0.01 Hz	0.0	9-18
SrMF	160 *	15th speed run mode	***Same options as Item 132***	-	0	9-19

*Items 157 - 160 are available only when Item 129 Adjustment Range options 1 - 15 is selected.

PROGRAM MODE

Gr.Pr PROTECTION PARAMETERS

DISPLAY	ITEM NO.	PARAMETER DESCRIPTION	ADJUSTMENT RANGE	DISPLAY RESOLUTION	FACTORY SETTING	PAGE NO.
Pb	161	Dynamic braking (DBR) selection	0: No DBR 1: With DBR, no OLr detection 2: With DBR, and OLr detection *	-	0	9-20
Pbr	162 *	DBR resistor value	1.0 - 1000	0.1 Ohm	*****	9-20
PbCP	163 *	DBR capacity	0.01 - 600	0.01 kW	*****	9-20
OPSS	164	Overvoltage stall protection	0: On 1: Off	-	0	9-20
dbF	165	DC injection braking start frequency	0 - 120 **	0.1/0.01 Hz	0.0	9-21
dbC	166 **	DC injection current	0 - 100%/A	1 %/A	0	9-21
dbt	167 **	DC injection time	0 - 10	0.1 sec	0.0	9-21
dbSL	168	Fwd/Rev DC injection priority control	0: Off 1: On	-	0	9-21
db In	169	Motor shaft stationary control	0: Off 1: On	-	0	9-21
EStP	170	Emergency stop selection	0: Coast to stop 1: Decelerated stop 2: DC injection stop ***	-	0	9-21
Edbt	171***	Emergency stop DC injection time	0 - 10	0.1 sec	0.1	9-21
rtrY	172	Number of retry attemps selection	0: No retry 1: Retry 1 time **** 2: Retry 2 times **** 3: Retry 3 times **** 4: Retry 4 times **** 5: Retry 5 times **** 6: Retry 6 times **** 7: Retry 7 times **** 8: Retry 8 times **** 9: Retry 9 times **** 10: Retry 10 times ****	-	5	9-21
rtt	173 ****	Retry time setting	0.0 - 10	0.1 sec	3.0	9-21

*Items 162 - 163 are available only when Item 161 Adjustment Range option 2 is selected.
**Items 166 - 167 are available only when Item 165 Adjustment Range is set to other than "0".
***Item 171 is available only when Item 170 Adjustment Range option 2 is selected.
****Item 173 is available only when Item 172 Adjustment Range options 1 - 10 are selected.
*****Default wattage and ohm values depend on the drive size.

Table cont'd on next page

PROGRAM MODE

Gr.Pr PROTECTION PARAMETERS

DISPLAY	ITEM NO.	PARAMETER DESCRIPTION	ADJUSTMENT RANGE	DISPLAY RESOLUTION	FACTORY SETTING	PAGE NO.
UuC	174	Regeneration power ride-through control	0: Off 1: On *	-	0	9-21
UuCt	175 *	Regeneration power ride-through time	0.0 - 25	0.1 sec	2.0	9-22
ArSt	176	Auto-restart (motor speed search)	0: Off 1: On momentary power failure 2: On ST make/break (commercial power switching) 3: Both 1 and 2	-	3	9-22
tHr1	177	Electronic thermal protection level #1	10 - 100%/A	1%/A	100	9-22
OLF	178	Overload reduction start-up frequency	0 - 30	0.1/0.01 Hz	30.0	9-22
OLt	179	Motor 110% overload time limit	10 - 2400	10 sec	600	9-22
OLM	180	Overload selection	0: Standard 1: Soft stall On 2: OLMt trip Off 3: Soft stall On, OLMt trip Off	-	1	9-22
StC1	181	Stall protection #1	0: On ** 1: Off	-	0	9-22
StL1	182 **	Stall protection level (current limit level adjust)	10 - 215%/A	1 %/A	110	9-22
UPSL	183	Undervoltage trip selection	0: Trip disabled 1: Trip (during run)	-	0	9-23
UPt	184	Undervoltage detection time	0 - 10	0.01 sec	0.03	9-23
LLP	185	Low current detection selection (output fault detection)	0: Trip disabled 1: Trip on detection	-	0	9-23
LLPC	186	Low current detection level	0 - 100%/A	1%/A	0	9-23
LLPt	187	Low current detection time	0 - 255	1 sec	0	9-23
OCLS	188	Output short-circuit detection selection (OCL)	0: Standard 1: Standard, High speed motor use 2: Position use (during JOG) 3: High speed motor use, Position use (during JOG)	-	0	9-23

*Item 175 is available only when Item 174 Adjustment Range option 1 is selected.
**Item 182 is available only when Item 181 Adjustment Range option 0 is selected.

Table cont'd on next page

PROGRAM MODE

Gr.Pr PROTECTION PARAMETERS

DISPLAY	ITEM NO.	PARAMETER DESCRIPTION	ADJUSTMENT RANGE	DISPLAY RESOLUTION	FACTORY SETTING	PAGE NO.
OtSL	189	Overtorque trip selection	0: Trip disabled 1: Trip enabled	-	0	9-23
OtL	190	Overtorque trip level	0 - 200%/A	1%/A	150	9-23
trCL	191	Fault trip saving	0: Fault cleared when power cycled 1: Fault display retained when power cycled *	-	0	9-23
FAn	192	Cooling fan control selection	0: Automatic 1: Always On	-	0	9-23
OJt	193	Cumulative run timer alarm setting	0.00 - 999.9 (1 = 100 hours)	0.02 (two hours)	175.0	9-24
LA15	194	IV analog input loss	0: Regular E3 1: Run at LL after IV loss if running before loss ** 2: Run at UL after IV loss ifrunning before loss ** 3: Trip ("LOSS") after IV loss** 4: Run at P015 % of freq at IV loss if running before IV loss ** & ***	-	0	9-24
P015	195***	Percentage of frequency at IV loss	0 - 100	1 %	100	9-24
td	196**	Minimum time to detect IV loss	0.3 - 1.0	0.1sec	0.3	9-24

*This parameter disables the retry function (see Items 172 and 173).
**Item 196 is available only when Item 194 Adjustment Range options 1 - 4 is selected.
***Item 195 is available only when Item 194 Adjustment Range option 4 is selected.

PROGRAM MODE

Gr.Pt PATTERN RUN PARAMETERS

DISPLAY	ITEM NO.	PARAMETER DESCRIPTION	ADJUSTMENT RANGE	DISPLAY RESOLUTION	FACTORY SETTING	PAGE NO.
PSEL	197	Pattern run selection	0: Off 1: On *	-	0	9-25
PtM	198 *	Pattern run mode	0: Run pattern is reset when inverter is stopped 1: Pattern switches on continuation after a stop when current pattern completes	-	0	9-25
Pt 10	199 *	1st Pattern Group speed #0 selection	0: Skip 1: Preset speed FSor 2: Preset speed Sr02 3: Preset speed Sr03 4: Preset speed Sr04 5: Preset speed Sr05 6: Preset speed Sr06 7: Preset speed Sr07 8: Preset speed Sr08 9: Preset speed Sr09 10: Preset speed Sr 10 11: Preset speed Sr 11 12: Preset speed Sr 12 13: Preset speed Sr 13 14: Preset speed Sr 14 15: Preset speed Sr 15	-	1	9-25
Pt 11	200 *	1st Pattern Group speed #1 selection	***Same options as Item 199***	-	2	9-25
Pt 12	201 *	1st Pattern Group speed #2 selection	***Same options as Item 199***	-	3	9-25
Pt 13	202 *	1st Pattern Group speed #3 selection	***Same options as Item 199***	-	4	9-25
Pt 14	203 *	1st Pattern Group speed #4 selection	***Same options as Item 199***	-	5	9-25
Pt 15	204 *	1st Pattern Group speed #5 selection	***Same options as Item 199***	-	6	9-25
Pt 16	205 *	1st Pattern Group speed #6 selection	***Same options as Item 199***	-	7	9-25
Pt 17	206 *	1st Pattern Group speed #7 selection	***Same options as Item 199***	-	8	9-26

*Items 198 - 206 are available only when Item 197 Adjustment Range option 1 is selected.

Table Cont'd on Next Page

PROGRAM MODE

Gr.Pt PATTERN RUN PARAMETERS (cont'd)

DISPLAY	ITEM NO.	PARAMETER DESCRIPTION	ADJUSTMENT RANGE	DISPLAY RESOLUTION	FACTORY SETTING	PAGE NO.
PtL1	207 *	1st Pattern Group number of cycles	1 - 254, 255=infinity	-	1	9-26
Pt20	206 *	2nd Pattern Group speed #0 selection	***Same options as Item 199***	-	9	9-25
Pt21	209 *	2nd Pattern Group speed #1 selection	***Same options as Item 199***	-	10	9-25
Pt22	210 *	2nd Pattern Group speed #2 selection	***Same options as IItem 199***	-	11	9-25
Pt23	211 *	2nd Pattern Group speed #3 selection	***Same options as Item 199***	-	12	9-25
Pt24	212 *	2nd Pattern Group speed #4 selection	***Same options as Item 199***	-	13	9-25
Pt25	213 *	2nd Pattern Group speed #5 selection	***Same options as Item 199***	-	14	9-25
Pt26	214 *	2nd Pattern Group speed #6 selection	***Same options as Item 199***	-	15	9-25
Pt27	215 *	2nd Pattern Group speed #7 selection	***Same options as Item 199***	-	0	9-26
PtL2	216 *	2nd Pattern Group number of cycles	1 - 254, 255=infinity	-	1	9-26
Pt30	217 *	3rd Pattern Group speed #0 selection	***Same options as Item 199***	-	1	9-25
Pt31	218 *	3rd Pattern Group speed #1 selection	***Same options as Item 199***	-	2	9-25
Pt32	219 *	3rd Pattern Group speed #2 selection	***Same options as Item 199***	-	3	9-25
Pt33	220 *	3rd Pattern Group speed #3 selection	***Same options as Item 199***	-	4	9-25

*Items 207 - 220 are available only when Item 197 Adjustment Range option 1 is selected.

Table Cont'd on Next Page

PROGRAM MODE

Gr.Pt PATTERN RUN PARAMETERS (cont'd)

DISPLAY	ITEM NO.	PARAMETER DESCRIPTION	ADJUSTMENT RANGE	DISPLAY RESOLUTION	FACTORY SETTING	PAGE NO.
Pt34	221*	3rd Pattern Group speed #4 selection	***Same options as Item 199***	-	5	9-25
Pt35	222 *	3rd Pattern Group speed #5 selection	***Same options as Item 199***	-	6	9-25
Pt36	223 *	3rd Pattern Group speed #6 selection	***Same options as Item 199***	-	7	9-25
Pt37	224 *	3rd Pattern Group speed #7 selection	***Same options as Item 199***	-	8	9-26
PtL3	225 *	3rd Pattern Group number of cycles	1 - 254, 255=infinity	-	1	9-26
Pt40	226 *	4th Pattern Group speed #0 selection	***Same options as Item 199***	-	9	9-25
Pt41	227 *	4th Pattern Group speed #1 selection	***Same options as Item 199***	-	10	9-25
Pt42	228 *	4th Pattern Group speed #2 selection	***Same options as Item 199***	-	11	9-25
Pt43	229 *	4th Pattern Group speed #3 selection	***Same options as Item 199***	-	12	9-25
Pt44	230 *	4th Pattern Group speed #4 selection	***Same options as Item 199***	-	13	9-25
Pt45	231 *	4th Pattern Group speed #5 selection	***Same options as Item 199***	-	14	9-25
Pt46	232 *	4th Pattern Group speed #6 selection	***Same options as Item 199***	-	15	9-25
Pt47	233 *	4th Pattern Group speed #7 selection	***Same options as Item 199***	-	0	9-26
PtL4	234 *	4th Pattern Group number of cycles	1 - 254, 255=infinity	-	1	9-26

*Items 221 - 234 are available only when Item 197 Adjustment Range option 1 is selected.

Table Cont'd on Next Page

PROGRAM MODE

Gr.Pt PATTERN RUN PARAMETERS (cont'd)

DISPLAY	ITEM NO.	PARAMETER DESCRIPTION	ADJUSTMENT RANGE	DISPLAY RESOLUTION	FACTORY SETTING	PAGE NO.
SLM1	235	Speed #1 drive continuation mode	0: Count in secs. from time of activation * 1: Count in mins. from time of activation * 2: Count in secs. from time set speed is reached * 3: Count in mins. from time set speed is reached * 4: Non-stop (continue until STOP command) 5: Continue until next step command	-	0	9-26
SLt1	236 *	Speed #1 drive time	0 - 8000	1 sec./min.	0	9-26
SLM2	237	Speed #2 drive continuation mode	***Same options as Item 235***	-	0	9-26
SLt2	238 **	Speed #2 drive time	0 - 8000	1 sec./min.	0	9-26
SLM3	239	Speed #3 drive continuation mode	***Same options as Item 235***	-	0	9-26
SLt3	240 ***	Speed #3 drive time	0 - 8000	1 sec./min.	0	9-26
SLM4	241	Speed #4 drive continuation mode	***Same options as Item 235***	-	0	9-26
SLt4	242 ****	Speed #4 drive time	0 - 8000	1 sec./min.	0	9-26
SLM5	243	Speed #5 drive continuation mode	***Same options as Item 235***	-	0	9-26
SLt5	244 *****	Speed #5 drive time	0 - 8000	1 sec./min.	0	9-26

*Item 236 is available only when Item 235 Adjustment Range option 0 - 3 is selected.
**Item 238 is available only when Item 237 Adjustment Range option 0 - 3 is selected.
***Item 240 is available only when Item 239 Adjustment Range option 0 - 3 is selected.
****Item 242 is available only when Item 241 Adjustment Range option 0 - 3 is selected.
*****Item 244 is available only when Item 243 Adjustment Range option 0 - 3 is selected.

Table Cont'd on Next Page

PROGRAM MODE

Gr.Pt PATTERN RUN PARAMETERS (cont'd)

DISPLAY	ITEM NO.	PARAMETER DESCRIPTION	ADJUSTMENT RANGE	DISPLAY RESOLUTION	FACTORY SETTING	PAGE NO.
SLM6	245	Speed #6 drive continuation mode	***Same options as Item 235***	-	0	9-26
SLt6	246 *	Speed #6 drive time	0 - 8000	1 sec./min.	0	9-26
SLM7	247	Speed #7 drive continuation mode	***Same options as Item 235***	-	0	9-26
SLt7	248 **	Speed #7 drive time	0 - 8000	1 sec./min.	0	9-26
SLM8	249	Speed #8 drive continuation mode	***Same options as Item 235***	-	0	9-26
SLt8	250 ***	Speed #8 drive time	0 - 8000	1 sec./min.	0	9-26
SLM9	251	Speed #9 drive continuation mode	***Same options as Item 235***	-	0	9-26
SLt9	252 ****	Speed #9 drive time	0 - 8000	1 sec./min.	0	9-26
SLMA	253	Speed #10 drive continuation mode	***Same options as Item 235***	-	0	9-26
SLtA	254 *****	Speed #10 drive time	0 - 8000	1 sec./min.	0	9-26

*Item 246 is available only when Item 245 Adjustment Range option 0 - 3 is selected.
**Item 248 is available only when Item 247 Adjustment Range option 0 - 3 is selected.
***Item 250 is available only when Item 249 Adjustment Range option 0 - 3 is selected.
****Item 252 is available only when Item 251 Adjustment Range option 0 - 3 is selected.
*****Item 254 is available only when Item 253 Adjustment Range option 0 - 3 is selected.

Table Cont'd on Next Page

PROGRAM MODE

Gr.Pt PATTERN RUN PARAMETERS (cont'd)

DISPLAY	ITEM NO.	PARAMETER DESCRIPTION	ADJUSTMENT RANGE	DISPLAY RESOLUTION	FACTORY SETTING	PAGE NO.
SLMb	255	Speed #11 drive continuation mode	***Same options as Item 235***	-	0	9-26
SLtb	256 *	Speed #11 drive time	0 - 8000	1 sec./min.	0	9-26
SLMC	257	Speed #12 drive continuation mode	***Same options as Item 235***	-	0	9-26
SLtC	258 **	Speed #12 drive time	0 - 8000	1 sec./min.	0	9-26
SLMd	259	Speed #13 drive continuation mode	***Same options as Item 235***	-	0	9-26
SLtd	260 ***	Speed #13 drive time	0 - 8000	1 sec./min.	0	9-26
SLME	261	Speed #14 drive continuation mode	***Same options as Item 235***	-	0	9-26
SLtE	262 ****	Speed #14 drive time	0 - 8000	1 sec./min.	0	9-26
SLMF	263	Speed #15 drive continuation mode	***Same options as Item 235***	-	0	9-26
SLtF	264 *****	Speed #15 drive time	0 - 8000	1 sec./min.	0	9-26

*Item 256 is available only when Item 255 Adjustment Range option 0 - 3 is selected.
**Item 258 is available only when Item 257 Adjustment Range option 0 - 3 is selected.
***Item 260 is available only when Item 259 Adjustment Range option 0 - 3 is selected.
****Item 262 is available only when Item 261 Adjustment Range option 0 - 3 is selected.
*****Item 264 is available only when Item 263 Adjustment Range option 0 - 3 is selected.

PROGRAM MODE

Gr.Fb FEEDBACK PARAMETERS

DISPLAY	ITEM NO.	PARAMETER DESCRIPTION	ADJUSTMENT RANGE	DISPLAY RESOLUTION	FACTORY SETTING	PAGE NO.
FbP1	265	Feedback control selection	0: No feedback control 1: PID setpoint control * 2: Speed feedback control *	-	0	9-27
Fb In	266 *	Feedback input signal selection	1: RR input 2: IV input 3: RX input 4: PG feedback (option board) 5: RS232C input 6: Communication/12-bit binary option board input 7: BIN input	-	2	9-27
GP	267 *	Proportional gain	0.01 - 2.55	0.01	0.30	9-27
G1	268 *	Integral gain	0.01 - 360.0	0.01 sec	2.00	9-27
GA	269 *	Differential gain	0.0 - 25.5	0.1 sec	0.0	9-27
GFS	270 *	Lag time constant	0 - 255	1	80	9-27
PILL	271 *	PID lower limit frequency	0 - upper limit	0.01/ 0.1 Hz	10.0	9-27
PuL	272	PID deviation limit selection	0: No PID deviation limit 1: PID deviation limited**	-	1	9-27
PuUL	273**	PID deviation upper limit	0 - 50%	1%	10	9-27
PuLL	274**	PID deviation lower limit	0 - 50%	1%	10	9-27
PG	275	PG input-number of pulses	1 - 9999	1	500	9-27
PGPH	276	PG input-number of phases	1: Single phase input 2: Two-phase input	-	2	9-27
drPC	277	Drooping control	0: Off 1: On ***	-	0	9-28
drPt	278***	Drooping control amount ***	0.0 - 10.0%	0.1%	0.0	9-28

*Items 266 - 271 are available only when Item 265 Adjustment Range options 1 - 2 are selected.
**Item 273 - 274 are available only when Item 272 Adjustment Range option 1 is selected.
***Item 278 is available only when Item 277 Adjustment Range option 1 is selected.

Table Cont'd on Next Page

PROGRAM MODE

Gr.Fb FEEDBACK PARAMETERS (cont'd)

DISPLAY	ITEM NO.	PARAMETER DESCRIPTION	ADJUSTMENT RANGE	DISPLAY RESOLUTION	FACTORY SETTING	PAGE NO.
Ord1	279	Override control	0: Off 1: FCRR 2: FCIV 3: FCRX 4: FCPG 5: FCPNL 6: FCOPT 7: FCMLT *	-	0	9-28
Ord2	280*	Override multiplier input selection	0: Reference 1: KRR 2: KIV 3: KRX 4: KBIN	-	0	9-28
Ord3	281*	Override change multiplier	-100.0 - 100.0%	0.1%	0.0	9-28

*Items 280 - 281 are available only when Item 279 Adjustment Range option 7 is selected.

PROGRAM MODE

Cr.tr COMMUNICATION PARAMETERS

DISPLAY	ITEM NO.	PARAMETER DESCRIPTION	ADJUSTMENT RANGE	DISPLAY RESOLUTION	FACTORY SETTING	PAGE NO.
brt2	282	RS232 baud rate	0: 2400 baud 1: 4800 baud 2: 9600 baud	-	2	9-29
SN78	283	Number of data bits	0: 7 bits 1: 8 bits	-	0	9-29
SNE0	284	Parity	0: Even parity 1: Odd parity	-	0	9-29
Ino	285	Inverter number	0 - 255	-	0	9-29
OPt	286	Communication selection	0: Off 1: RS485 * 2: TOSLINE-F10 ** 3: TOSLINE-S20 *** 4: 12-bit binary input 5: 3-digit BCD input (0.1 Hz units) 6: 3-digit BCD input (1 Hz units)	-	0	9-29
MSt	287 *	Master/slave selection	0: Slave 1: Master (frequency command) 2: Master (output frequency)	-	0	9-29
brt4	288 *	RS485 baud rate	0: Normal mode 1: High speed mode	-	0	9-29
M In	289 **	TOSLINE-F10 command input	0: Off 1: Frequency command 2: Command input 3: Frequency command, command input	-	0	9-29

*Items 287 - 288 are available only when Item 286 Adjustment Range option 1 is selected.
**Item 289 is available only when Item 286 Adjustment Range option 2 is selected.

Cycle power after changing any parameter in Communication Parameter.

Table Cont'd on Next Page

PROGRAM MODE

Gr.tr COMMUNICATION PARAMETERS (cont'd)

DISPLAY	ITEM NO.	PARAMETER DESCRIPTION	ADJUSTMENT RANGE	DISPLAY RESOLUTION	FACTORY SETTING	PAGE NO.
MOUt	290 **	TOSLINE-F10 monitor output	0: Off 1: Output frequency 2: Status 3: Output frequency, status 4: Output current 5: Output frequency, output current 6: Status, output current 7: Output frequency, status, output current 8: Output voltage 9: Output frequency, output voltage 10: Output voltage, status 11: Output frequency, output voltage, status 12: Output voltage, output current 13: Output voltage, output current, output frequency 14: Output voltage, output current, status 15: Output voltage, output current, output frequency, status	-	0	9-29
MErr	291**	TOSLINE-F10 communication error mode	0: Data cleared 1: Data retained	-	0	9-30
InA	292***	TOSLINE-S20 receive address	0 - 1023	1	0	9-30
OUtA	293***	TOSLINE-S20 transmit address	0 - 1023	1	0	9-30

**Items 290 - 291 are available only when Item 286 Adjustment Range option 2 is selected.
***Items 292 - 293 are available only when Item 286 Adjustment Range option 3 is selected.

Cycle power after changing any parameter in Communication Parameter.

PROGRAM MODE

Cr.tr COMMUNICATION PARAMETERS (cont'd)

DISPLAY	ITEM NO.	PARAMETER DESCRIPTION	ADJUSTMENT RANGE	FACTORY SETTING	PAGE NO.
S In	294***	TOSLINE-S20 command input	0: Off 1: Command input 2: Base speed value 3: Base speed value, command input 4: Auxillary base speed value 5: Auxillary base speed value, command input 6: Auxillary base speed value, base speed value 7: Auxillary base speed value, base speed value, command input 8: External current limit value 9: External current limit value, command input 10: External current limit value, base speed value 11: External current limit value, base speed value, command input 12: External current limit value, auxillary base speed value 13: External current limit value, auxillary base speed value, command input 14: External current limit value, auxillary base speed value, base speed value 15: External current limit value, auxillary base speed value, base speed value, command input 16: Drooping online gain 17: Option 16 + Option 1 18: Option 16 + Option 2 19: Option 16 + Option 3 20: Option 16 + Option 4 21: Option 16 + Option 5 22: Option 16 + Option 6 23: Option 16 + Option 7 24: Option 16 + Option 8 25: Option 16 + Option 9 26: Option 16 + Option 10 27: Option 16 + Option 11 28: Option 16 + Option 12 29: Option 16 + Option 13 30: Option 16 + Option 14 31: Option 16 + Option 15	0	9-30

***Item 294 is available only when Item 286 Adjustment Range option 3 is selected.

Cycle power after changing any parameter in Communication Parameter.

Table Cont'd on Next Page

PROGRAM MODE

Cr.tr COMMUNICATION PARAMETERS (cont'd)

DISPLAY	ITEM NO.	PARAMETER DESCRIPTION	ADJUSTMENT RANGE	FACTORY SETTING	PAGE NO.
SOUt	295***	TOSLINE-S20 monitor output	0: Off 1: Status 2: Speed feedback value 3: Speed feedback value, status 4: Output current value 5: Output current value, status 6: Output current value, speed feedback value 7: Output current value, speed feedback value, status 8: Excitation current value 9: Excitation current value, status 10: Excitation current value, speed feedback value 11: Excitation current value, speed feedback value, status 12: Excitation current value, output current value 13: Excitation current value, output current value, status 14: Excitation current value, output current value, speed feedback value 15: Excitation current value, output current value, speed feedback value, status 16: Torque current value 17: Option 16 + Option 1 18: Option 16 + Option 2 19: Option 16 + Option 3 20: Option 16 + Option 4 21: Option 16 + Option 5 22: Option 16 + Option 6 23: Option 16 + Option 7 24: Option 16 + Option 8 25: Option 16 + Option 9 26: Option 16 + Option 10 27: Option 16 + Option 11 28: Option 16 + Option 12 29: Option 16 + Option 13 30: Option 16 + Option 14 31: Option 16 + Option 15	0	9-30

***Item 295 is available only when Item 286 Adjustment Range option 3 is selected.

Cycle power after changing any parameter in Communication Parameter.

Table Cont'd on Next Page

PROGRAM MODE

Gr.tr COMMUNICATION PARAMETERS (cont'd)

DISPLAY	ITEM NO.	PARAMETER DESCRIPTION	ADJUSTMENT RANGE	DISPLAY RESOLUTION	FACTORY SETTING	PAGE NO.
FInS	296 *	TOSLINE-S20 reference frequency address selection	0: receive address + 1 1: TOSLINE-S20 frequency address **	-	0	9-30
FInA	297 **	TOSLINE-S20 reference frequency address	0 - 1023	1	0	9-30
SErr	298 *	TOSLINE-S20	0: data cleared 1: data retained	-	0	9-30
SrE	299 *	TOSLINE-S20	0: no effect- 1: reset S20 option board	-	0	9-30
tr In	300	RS485/12-BIT BINARY % input: bias and gain settings	0: Off 1: On ***	-	0	9-30
PL	301 ***	Point #1 setting signal	0 - 100%	1%	0%	9-30
F-PL	302 ***	Point #1 frequency	0 - max output freq	0.1/0.01 Hz	0Hz	9-30
PH	303 ***	Point #2 setting signal	0 - 100%	1%	100%	9-30
F-PH	304 ***	Point #2 frequency	0 - max output freq	0.1/0.01 Hz	max output freq	9-30

*Items 296 - 299 are available only when Item 286 Adjustment Range option 3 is selected.
**Item 297 is available only when Item 296 Adjustment Range option 1 is selected.
***Items 301 - 304 are available only when Item 300 Adjustment Range option 1 is selected.

INDUSTRIAL APPLICATION PARAMETERS

Gr.01 **PUMP APPLICATION MACRO**

Gr.02 **FAN APPLICATION MACRO**

Gr.03 **COOLING TOWER APPLICATION MACRO**

These groups contain the parameters likely to be used for certain applications. See the E3 Application Manual (available from your Toshiba representative) for programming charts and macro values.

PROGRAM MODE

Gr.AM AM/FM ADJUSTMENT PARAMETERS

DISPLAY	ITEM NO.	PARAMETER DESCRIPTION	ADJUSTMENT RANGE	DISPLAY RESOLUTION	FACTORY SETTING	PAGE NO.
FMSL	305	FM terminal function selection	0: Pre-compensation reference frequency 1: Post-compensation output frequency 2: Frequency setting value 3: Output current 4: DC voltage 5: Output voltage 6: Torque current 7: Excitation current 8: PID feedback value 9: Motor overload ratio 10: Inverter overload ratio 11: DBR overload ratio 12: Input power 13: Output power 14: Meter calibration (100% fixed output) 15: Peak output current 16: Peak input current	-	0	9-31
FM	306	Frequency meter adjustment	0 - 65535	-	0.0	9-31
AMSL	307	AM terminal function selection	0: Pre-compensation reference frequency 1: Post-compensation output frequency 2: Frequency setting value 3: Output current 4: DC voltage 5: Output voltage 6: Torque current 7: Excitation current 8: PID feedback value 9: Motor overload ratio 10: Inverter overload ratio 11: DBR overload ratio 12: Input power 13: Output power 14: Meter calibration (100% fixed output) 15: Peak output current 16: Peak input current	-	3	9-32
AM	308	Ammeter adjustment	0 - 65535	-	C 0	9-32

PROGRAM MODE

Gr.Ut UTILITY PARAMETERS

DISPLAY	ITEM NO.	PARAMETER DESCRIPTION	ADJUSTMENT RANGE	FACTORY SETTING	PAGE NO.
APL	309	Industrial application parameters selection	0: Does nothing 1: Pump application 2: Fan application 3: Cooling tower application 4: Hoist application 5: Textiles application 6: Machine tool application	0	9-33
tYP	310	Standard setting mode selection	0: Does nothing 1: 50 Hz setting 2: 60 Hz setting 3: Factory setting 4: Trip history clear 5: Save user-settings parameters 6: Reset to user-settings parameters 7: Initialize drive typeform	0	9-33
CMOd	311	Command mode selection	0: Only RS232C input valid 1: Terminal input valid 2: Panel input valid 3: Communication option board input valid 4: Manual/Auto change over	4	9-33
FMOd	312	Frequency setting mode selection	0: Only RS232C input valid 1: Terminal input valid 2: Panel input valid 3: Communication/12-bit binary option board input valid 4: Local/remote change over	4	9-33
PMOd	* 313	Panel operation mode selection	0: Prohibit all key operations 1: Perform reset 2: Perform Manual/Auto operations 3: Perform reset, perform Manual/Auto operations 4: Perform emergency stop 5: Perform emergency stop, perform reset 6: Perform emergency stop, perform Manual/Auto operations 7: Perform emergency stop, perform Manual/Auto operations, perform reset 8: Perform run/stop operations 9: Perform run/stop operations, perform reset 10: Perform run/stop operations, perform Manual/Auto operations 11: Perform run/stop operations, perform Manual/Auto operations, perform reset 12: Perform run/stop operations, perform emergency stop 13: Perform run/stop operations, perform emergency stop, perform reset 14: Perform run/stop operations, perform emergency stop, perform Manual/Auto operations 15: Perform run/stop operations, perform emergency stop, perform Manual/Auto operations, perform reset **(Cont'd)**	63	9-34

Table Cont'd on Next Page

*** NOTE: Cycle power after changing ITEM 313,** "Panel Operation Mode Selection", **ESTOP** from keypad while in remote mode cannot be disabled.

PROGRAM MODE

Gr.Ut UTILITY PARAMETERS (cont'd)

DISPLAY	ITEM NO.	PARAMETER DESCRIPTION	ADJUSTMENT RANGE	FACTORY SETTING	PAGE NO.
			(cont'd)		
PNOd	*313	Panel operation mode selection	16: Perform parameter read operations 17: Option 16 + Option 1 18: Option 16 + Option 2 19: Option 16 + Option 3 20: Option 16 + Option 4 21: Option 16 + Option 5 22: Option 16 + Option 6 23: Option 16 + Option 7 24: Option 16 + Option 8 25: Option 16 + Option 9 26: Option 16 + Option 10 27: Option 16 + Option 11 28: Option 16 + Option 12 29: Option 16 + Option 13 30: Option 16 + Option 14 31: Option 16 + Option 15 32: Perform parameter change operations 33: Option 32 + Option 1 34: Option 32 + Option 2 35: Option 32 + Option 3 36: Option 32 + Option 4 37: Option 32 + Option 5 38: Option 32 + Option 6 39: Option 32 + Option 7 40: Option 32 + Option 8 41: Option 32 + Option 9 42: Option 32 + Option 10 43: Option 32 + Option 11 44: Option 32 + Option 12 45: Option 32 + Option 13 46: Option 32 + Option 14 47: Option 32 + Option 15 48: Option 32 + Option 16 49: Option 32 + Option 17 50: Option 32 + Option 18 51: Option 32 + Option 19 52: Option 32 + Option 20 53: Option 32 + Option 21 54: Option 32 + Option 22 55: Option 32 + Option 23 56: Option 32 + Option 24 57: Option 32 + Option 25 58: Option 32 + Option 26 59: Option 32 + Option 27 60: Option 32 + Option 28 61: Option 32 + Option 29 62: Option 32 + Option 30 63: Standard mode (perform all operations)	63	9-34

Table Cont'd on Next Page

*** NOTE: Cycle power after changing ITEM 313,** "Panel Operation Mode Selection", **ESTOP** from keypad while in remote mode cannot be disabled.

PROGRAM MODE

Gr.Ut UTILITY PARAMETERS (cont'd)

DISPLAY	ITEM NO.	PARAMETER DESCRIPTION	ADJUSTMENT RANGE	DISPLAY RESOLUTION	FACTORY SETTING	PAGE NO.
PASS	314	Pass number	00 - 99	1	00	9-34
uCPU	315	CPU version	Can be monitored only	-	-	9-34
urOM	316	ROM version	Can be monitored only	-	-	9-34
uEEP	317	EEPROM version	Can be monitored only	-	-	9-34
FOrM	318	Drive typeform	Can be monitored only	-	-	9-34
MOn1	319	Status monitor display selections	1: Post-compensation output frequency 2: Frequency command setting 3: Output current 4: Input voltage 5: Output voltage 6: Torque current 7: Excitation current 8: PID feedback value 9: Motor overload ratio 10: Drive overload ratio 11: DBR overload ratio 12: Input power 13: Output power 14: RR input value 15: Peak load current * 16: Peak input voltage * 17: Kilowatt hours 18: Megawatt hours	-	2	9-35
MOn2	320	Status monitor display selections	***Same options as Item 319***	-	3	9-35
MOn3	321	Status monitor display selections	***Same options as Item 319***	-	4	9-35
MOn4	322	Status monitor display selections	***Same options as Item 319***	-	5	9-35
dSP2	323	Frequency units multiplication factor **	0 (Off), 0.01 - 200	0.01	0.00	9-35
dSPF	324	Frequency display resolution	0: 1 Hz 1: 0.1 Hz 2: 0.01 Hz	-	1	9-35
dSPt	325	ACC/DEC time units selection	0: 0.1 secs 1: 0.01 secs	-	0	9-35
dSPC	326	Current units selection	0: % 1: A	-	0	9-35
dSPu	327	Voltage units selection	0: % 1: V	-	1	9-35

* The input voltage and output current peak monitor values are reset after each STOP command. However if the drive is stopped for less than 2 seconds, the peak values may not be reset.

** When the the multiplier is anything other than "0", the "Hz" units will not be displayed.

Table cont'd on next page

PROGRAM MODE

Gr.Ut UTILITY PARAMETERS (cont'd)

DISPLAY	ITEM NO.	PARAMETER DESCRIPTION	ADJUSTMENT RANGE	DISPLAY RESOLUTION	FACTORY SETTING	PAGE NO.
bLnd	328	Blind function selection	0: Items 329-345 blinded 1: Unblind Items 329-345*	-	1	9-36
bLF2	329 *	Fundamental parameters #2 blind	0: Blind this group 1: Add this group to visible list	-	0	9-36
bLPn	330 *	Panel control parameters blind	0: Blind this group 1: Add this group to visible list	-	0	9-36
bLSt	331 *	Terminal selection parameters blind	0: Blind this group 1: Add this group to visible list	-	1	9-36
bLSC	332 *	Special control parameters blind	0: Blind this group 1: Add this group to visible list	-	1	9-36
bLSF	333 *	Frequency setting parameters blind	0: Blind this group 1: Add this group to visible list	-	0	9-36
bLPr	334 *	Protection parameters blind	0: Blind this group 1: Add this group to visible list	-	1	9-36
bLPt	335 *	Pattern run control parameters blind	0: Blind this group 1: Add this group to visible list	-	0	9-36
bLFb	336 *	Feedback control parameters blind	0: Blind this group 1: Add this group to visible list	-	1	9-36
bLtr	337 *	Communication parameters blind	0: Blind this group 1: Add this group to visible list	-	1	9-36
bL01	338 *	Industrial application parameters (Pump) blind	0: Blind this group 1: Add this group to visible list	-	1	9-37
bL02	339 *	Industrial application parameters (Fan) blind	0: Blind this group 1: Add this group to visible list	-	1	9-37
bL03	340 *	Industrial application parameters (Cooling tower) blind	0: Blind this group 1: Add this group to visible list	-	1	9-37
bLAM	344 *	AM/FM adjustment parameters blind	0: Blind this group 1: Add this group to visible list	-	1	9-37
bLMt	345 *	Motor parameters blind	0: Blind this group 1: Add this group to visible list	-	0	9-37

*Items 329 - 345 are available only when Item 328 Adjustment Range option 1 is selected.

Items 341 - 343 are Non-applicable and do not appear.

(* Group must be unblinded to access group's parameters)

PROGRAM MODE

Gr.Mt MOTOR PARAMETERS

DISPLAY	ITEM NO.	PARAMETER DESCRIPTION	ADJUSTMENT RANGE	DISPLAY RESOLUTION	FACTORY SETTING	PAGE NO.
Mt.P	346	Number of motor poles	2, 4, 6, 8, 10, 12, 14, 16	2	4	9-38
Mt.C	347	Motor rated capacity	0.1 - 90.0 kW	0.1kW	*	9-38
Mt.t	348	Motor type	0: Toshiba EQP-III motor 1: Toshiba standard motor 2: Other **	-	0	9-38
Mt.u	349**	Rated voltage for 460V inverter Rated voltage for 230V inverter	90 - 600 90 - 600	5V 5V	460 230	9-38
Mt.F	350 **	Rated frequency	0 - 400	2 Hz	60	9-38
Mt.r	351 **	Rated RPM	0 - 9999	1 RPM	1710	9-38
Mt.tn	352 **	Auto-tuning	0: Auto-tuning disabled 1: Auto-tuning enabled	-	0	9-38
Mt.IH	353	Load moment of inertia	0: Small 1: Medium 2: Large 3: Very large	-	1	9-38

* Items 345 factory setting depends on inverter rating (1 HP = .746kW).
** Items 349 - 352 are available only when Item 348 Adjustment Range option 2 is selected.

STANDARD MONITOR MODE

DISPLAYED VALUE ***	ITEM NO.	DISPLAY RANGE	PARAMETER DESCRIPTION	DISPLAY RESOLUTION	FACTORY SETTING	PAGE NO.
Pt 13	354	Pt-- if no currently active pattern group or pattern speed	Currently active pattern group number and pattern speed **	n/a	n/a	9-39
n 145	355	n--- if no pattern group reptitions remaining	Number of pattern group repetitions remaining **	n/a	n/a	9-39
Sr 12	356	Sr-- if no preset speed is being used	Number of the preset speed being used **	n/a	n/a	9-39
2365	357	---- if no pattern time remaining *	Remaining pattern time (secs or mins) **	n/a	n/a	9-39
Fr-F	358	Fr-F or Fr-r	Turning direction of motor	------	Fr-F	9-39
: 60.0	359	Post compensation output frequency	Monitor #1 (depending on M0n1 setting in Item 319, one of the 18 values in Items 359 to 376 will be displayed)	------	: C 0	9-39
: 60.0	360	Frequency command setting		------	: C 0	9-39
: C 0	361	Output current		------	: C 0	9-39
: V 0	362	Input voltage		------	: C 0	9-39
: P 0	363	Output voltage		------	: C 0	9-39
: q 0	364	Torque current		------	: C 0	9-39
: E 0	365	Excitation current		------	: C 0	9-39
: d 0	366	PID feedback value		------	: C 0	9-39
: L 0	367	Motor overload ratio		------	: C 0	9-39
: G 0	368	Drive overload ratio		------	: C 0	9-39
: r 0	369	DBR overload ratio		------	: C 0	9-39
: h 0	370	Input power		------	: C 0	9-39
: H 0	371	Output power		------	: C 0	9-40
: J 0	372	RR input value		------	: C 0	9-40
: c 0	373	Peak load current		------	: C 0	9-40
: u 0	374	Peak input voltage		------	: C 0	9-40
: U 0	375	Kilowatt hour energy		------	: C 0	9-40
: n 0	376	Megawatt hour energy		------	: C 0	9-40

Table Cont'd on Next Page

* This display appears as shown here when "non-stop (continue until STOP command)" or "continue until next step command" is selected as the speed's continue mode in the Pattern Run Control Parameters group.

** Parameters are only displayed when in pattern run.

*** Displayed values will vary depending on existing drive conditions and monitor settings.

STANDARD MONITOR MODE

Table cont'd from previous Page

DISPLAYED VALUE *	ITEM NO.	DISPLAY RANGE	PARAMETER DESCRIPTION	DISPLAY RESOLUTION	FACTORY SETTING	PAGE NO.
:y 0	377	Input voltage	Monitor #2 **	------	:y 0	9-40
:P 0	378	Output voltage	Monitor #3 **	------	:P 0	9-40
:q 0	379	Torque current	Monitor #4 **	------	:q 0	9-40
: A1111111	380	(See code on page 11-8)	Input terminal status monitor	------	n/a	9-40
: b1111111	381	(See code on page 11-8)	Input terminal status monitor	------	n/a	9-40
: 01111111	382	(See code on page 11-8)	Output terminal status monitor	------	n/a	9-40
:t 0.00	383	n/a	Total run time monitor	------	n/a	9-40
***	384	n/a	Past trip #1 monitor	------	n/a	9-40
***	385	n/a	Past trip #2 monitor	------	n/a	9-40
***	386	n/a	Past trip #3 monitor	------	n/a	9-40
***	387	n/a	Past trip #4 monitor	------	n/a	9-40

* Displayed values will vary depending on existing drive conditions and monitor settings.

** Monitor #2, #3, and #4 functions are identical to monitor #1 but the actual displayed value will depend on status monitor display adjustment items selected in Utility parameter Items 320, 321, or 322 (if different from default value).

*** See drive trip codes page 7-19

SETUP MODE PARAMETERS (SEtP)

Item 1, ACCELERATION TIME #1 (ACC 1)
This parameter sets the time for drive output frequency to go from 0 Hz to MAXIMUM OUTPUT FREQUENCY (FH) (Item 19). A small acceleration time may result in an overcurrent trip.

Item 2, DECELERATION TIME #1 (dEC 1)
This parameter sets the time for drive output frequency to go from MAXIMUM OUTPUT FREQUENCY (FH) (Item 19) to 0 Hz. A small deceleration time may result in an overvoltage trip.

Item 3, UPPER LIMIT FREQUENCY (UL)
This parameter sets the maximum frequency the drive will output, regardless of reference.

Item 4, LOWER LIMIT FREQUENCY (LL)
This parameter sets the lowest speed the drive can run at, regardless of reference. If this parameter is set to a non-zero value and the drive is given a run command (i.e. F-CC closure or RUN button), the drive will run at (LL) if the reference is less than (LL).

Item 5, SWITCH ON FLY (SFLY)
This parameter allows switching frequency commands between LOCAL and REMOTE modes and to switch control commands between MANUAL and AUTO modes while drive is running.

Item 6, IV INPUT SELECTION (Iv In)
Use this parameter to allow adjustment of the RR reference's bias and gain. Items 7 and 8 define one point on a % input reference vs. output Hz graph; Items 9 and 10 define another. The drive varies its output frequency as its input changes according to a line connecting these points. See graph below. With default programming, drive outputs 40 Hz with 5 volts on the "IV" terminal.

Item 7, IV REFERENCE POINT #1 (P3)
Use this parameter to set a percentage of reference.

Item 8, IV REF POINT #1 FREQUENCY (F-P3)
Use this parameter to set the desired drive output Hz when its reference has the value set in Item 7 above.

Item 9, IV REFERENCE POINT #2 (P4)
Use this parameter to set a percentage of reference. The "IV" terminal's range is 0-10 volts, so the factory default of 100% corresponds to 10 volts.

Item 10, IV REF POINT #2 FREQUENCY (F-P4)
Use this parameter to set the desired output frequency when the reference has the value set in Item 9 above.

Bias/Gain of Frequency Input

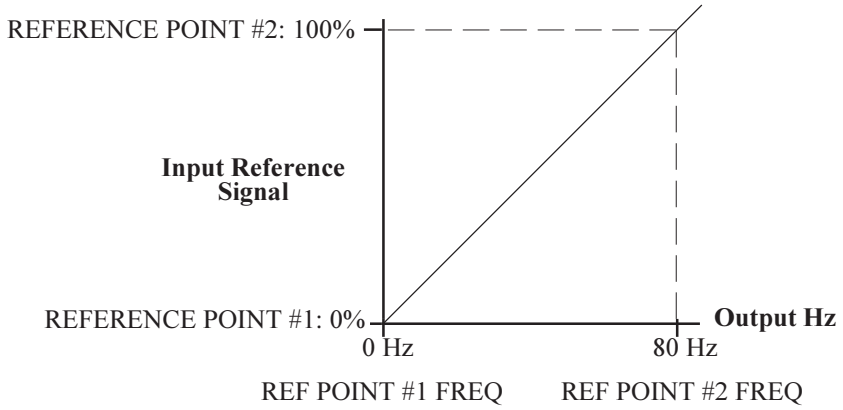

SETUP MODE PARAMETERS (StEP)

Item 11, ELECTRONIC THERMAL PROTECT LEVEL #1 (tHr 1)
Use this parameter to scale the motor overload protection to a specific motor's amp rating. Can be entered in percent or in amps, depending on the setting of Item 326, CURRENT UNITS SELECTION (dSPC). For percent setting, divide the motor full load amps by drive full load amps and multiply by 100.

Item 12, STALL PROTECTION ENABLE #1 (StC 1)
Stall is a drive function used to limit the motor current by reducing output voltage and frequency in an effort to reduce the load. Stall is most effective on variable torque loads. This parameter turns stall off/on.

Item 13, STALL PROTECTION LEVEL #1 (StL 1)
Enter the current limit in amps or in percent of drive rating. See Item 326, CURRENT UNITS SELECTION (dSPC), to change units from % to amps.

Item 14, OVERLOAD SELECTION (OLM)
This parameter adjusts the overload protection scheme.

- *0:* Standard
- *1:* Soft stall on. Soft stall reduces output frequency only when the drive is in its overload region. Soft stall helps prevent drive from tripping on "inverter overload" (OL In) .
- *2:* Motor overload trip off.
- *3:* Soft stall on and motor overload trip off.

Motor overload sensing is "on" unless "2" or "3" is selected.

INVERTER OVERLOAD (OL In) cooling time is approximately one minute after trip.
MOTOR OVERLOAD (OLMt) cooling time is approximately five minutes after trip.
DBR OVERLOAD (OLr) cooling time is approximately thirty seconds after trip.

Item 15, MOTOR 110% OVERLOAD TIME LIMIT (OLt)
This parameter sets the time the drive will output 110% of the current set by Item 11, (tHr 1) before tripping on "motor overload" (OLMt).

Item 16, INDUSTRIAL APPLICATION SELECTION (APL)
This parameter can be changed only when the drive's output is 0.0 Hz. When programmed with a non zero value, the drive will initialize itself (prior programming is erased) to parameter values that lend themselves to specific applications.

Item 17, STANDARD SETTING MODE SELECTION (tYP)
This parameter can be changed at any time. This parameter resets the parameter values of the drive as follows:

- *1:* Default drive to typical 50 Hz application settings.
- *2:* Default drive to typical 60 Hz application settings.
- *3:* Default drive to Toshiba factory settings listed in "Factory Setting" column on pages 8-1 through 8-35. Past four faults in the monitor erased.
- *4:* Erase past four faults in the monitor.
- *5:* Save present parameter settings in separate "user" default memory.
- *6:* Default drive to "user" default memory.
- *7:* Clear "inverter typeform error" (EtYP) (also defaults drive to factory values).

Item 18, PASS NUMBER (PASS)
Incorrect entry of the setting in this parameter prevents resetting keypad lockout (Item 313 (PMOd) set to "0"). Item 314 (PASS) is viewable through RS232 port.

FUNDAMENTAL PARAMETERS #1(GrF)

Item 19, MAXIMUM OUTPUT FREQUENCY (FH)
This parameter cannot be changed while the motor is running. It affects accel/decel times, binary frequency references, and other parameters and functions. To limit the drive's output frequency range, adjust UPPER LIMIT FREQUENCY (UL) and/or LOWER LIMIT FREQUENCY (LL) (see Items 24 and 25 below).

Item 20, BASE FREQUENCY (uL1)
This parameter sets the frequency at which the drive's output voltage reaches its maximum.

Item 21, BASE FREQUENCY VOLTAGE SELECTION (uLSL)
The parameter affects the drive's maximum output voltage as follows:

0: The output voltage fluctuates with the input voltage.
1: The output voltage is set according to the input voltage when the drive is first powered.
2: The output voltage is set by Item 22, MAXIMUM OUTPUT VOLTAGE #1 (uLu1).

Item 22, MAXIMUM OUTPUT VOLTAGE #1 (uLu1)
This parameter sets the drive's maximum output voltage **(the output voltage cannot exceed the input voltage)**.

Item 23, REVERSE DISABLE OPERATION SELECTION (d1Sr)
The drive will not run in reverse with this parameter set to option 1.

Item 24, UPPER LIMIT FREQUENCY (UL)
This parameter sets the maximum frequency that the drive will output, regardless of reference.

Item 25, LOWER LIMIT FREQUENCY (LL)
This parameter sets the lowest speed the drive can run, regardless of reference. If this parameter is set to a non-zero value and the drive is given a run command (i.e. F-CC closure or RUN button), the drive will run at LOWER LIMIT FREQUENCY (LL) if the reference is less than LOWER LIMIT FREQUENCY (LL).

Item 26, VOLTS PER HERTZ PATTERN (Pt)
The value in this parameter sets the way the output voltage changes with output frequency:

1: Constant torque: Drive output varies linearly with an output frequency change (at 30 Hz, output voltage is approximately half of what is is at 60 Hz).
2: Variable torque: Drive varies output voltage as the square of output frequency change (at 30 Hz, output voltage is approximately 1/4 of what it is at 60 Hz).
3: Automatic torque boost: Drive increases output voltage at low output frequences in order to increase motor starting torque.
4: Automatic torque boost with energy saving feature: Same as number 3 above, but the output voltage is lowered during lightly loaded periods.
5: True torque control: Drive maximizes torque developed by motor and compensates for motor slip. Item 328, BLIND FUNCTION SELECTION (bLnd) and Item 345, MOTOR PARAMETERS BLIND (bLMt), must also be set to option 1 so that GROUP: MOTOR RATING PARAMETERS (GrMt) can be adjusted (see page 8-35).
6: True torque control with energy saving feature: Same as number 5 above, but the output voltage is lowered during lightly loaded periods (reduces idle amps).

Item 27, VOLTAGE BOOST #1 (ub1)
This parameter increases output voltage at low frequencies enabling a motors operated in constant or variable torque modes to develop more starting torque. Too much voltage boost could result in an overcurrent trip.

FUNDAMENTAL PARAMETERS #1 (Gr.F)

Item 28, ACCELERATION TIME #1 (ACC 1)
AT#1 sets the time for drive output frequency to go from 0 Hz to MAXIMUM OUTPUT FREQUENCY (FH) (Item 19). A small acceleration time may result in an overcurrent trip.

Item 29, DECELERATION TIME #1 (dEC 1)
This parameter sets the time for drive output frequency to go from MAXIMUM OUTPUT FREQUENCY (FH) (Item 19) to 0 Hz. A small deceleration time may result in an overvoltage trip.

Item 30, ACC/DEC PATTERN #1 (SCu 1)
This value determines the way the drive's output frequency varies with time during an accel or decel as follows:

0: Linear pattern - Drive's output frequency change is linear with respect to time. For example, if the output goes from 0 to 30 Hz in 5 seconds, it will take 10 seconds to go from 0 to 60 Hz.

1: Self-adjusting - Drive changes value in ACC 1 and dEC 1 based on current during accel and bus voltage during decel to prevent overcurrent/overvoltage trips. Every time a run/stop is executed, the drive changes existing data in ACC 1 and dEC 1 (RAM). Drive may require a few run/stop commands to optimize value. To store modified ACC 1 and dEC 1 values, read value in ACC 1 and dEC 1 then press READ/WRITE to write values into memory (EEPROM).

2: S pattern - Drive output frequency's rate of change is slow near beginning and end of accel/decel.

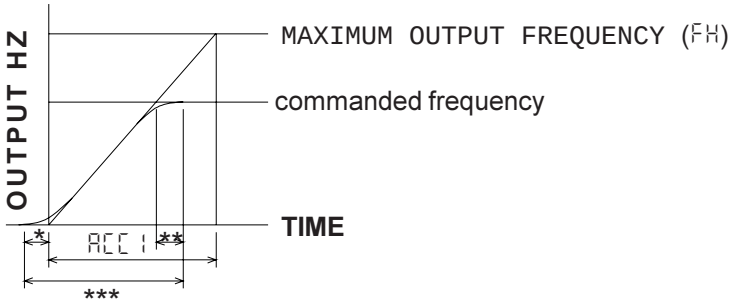

* S pattern accel time contributed by Item 31, ACCEL/DECEL PATTERN ADJUST LOW (SCL)
** S pattern accel time contributed by Item 32, ACCEL/DECEL PATTERN ADJUST HIGH (SCH)
*** Total S pattern accel time
Drive follows similar curve during decel.

3: Overspeed pattern - When outputting a frequency greater than the motor's base frequency, drive extends accel/decel time to reduce possibility of overload trip due to reduction in torque.

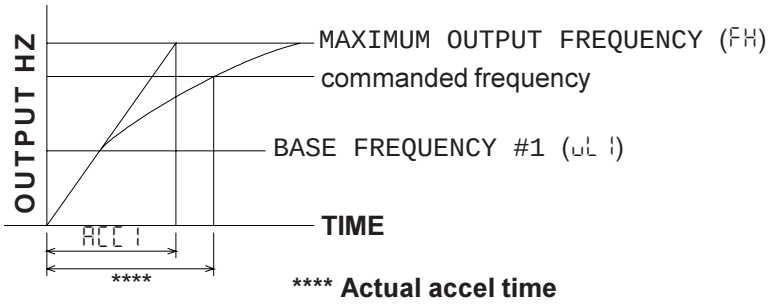

Item 31, ACCEL/DECEL PATTERN ADJUST LOW (SCL)
expressed as a percentage of Item 28, this time is represented as "*" in the S Pattern graph for Item 30.

Item 32, ACCEL/DECEL PATTERN ADJUST HIGH (SCH)
expressed as a percentage of Item 28, this time is represented as "**" in the S Pattern graph for Item 30.

FUNDAMENTAL PARAMETERS #2 (Gr.F2)

Item 33, BASE FREQUENCY #2 (uL2)
See Item 20, BASE FREQUENCY #1 (uL1)

Item 34, MAXIMUM OUTPUT VOLTAGE #2 (uLu2)
See Item 22, MAXIMUM OUTPUT VOLTAGE #1 (uLu1)

Item 35, VOLTAGE BOOST #2 (ub2)
See Item 27, VOLTAGE BOOST #1 (ub1)

Item 36, ELECTRONIC THERMAL PROTECT LEVEL #2 (tHr2)
This parameter lowers the drive's overload to protect the motor. Divide motor full-load amps by drive full-load amps and multiply by one hundred and enter the result in this parameter. Input in amps with Item 326, CURRENT UNITS SELECTION (dSPC), is set to option 1.

Item 37, STALL PROTECTION ENABLE #2 (StC2)
Stall is a drive function wherein the drive limits the motor current by reducing output voltage and frequency in an effort to reduce load. Stall is most effective on variable torque loads. This parameter turns stall off/on.

Item 38, STALL PROTECTION LEVEL #2 (SEL2)
Enter the current limit in amps or in percent of drive rating. See Item 326, CURRENT UNITS SELECTION (dSPC), to change units from % to amps.

Item 39, ACCELERATION TIME #2 (ACC2)
See Item 28, ACCELERATION TIME #1

Item 40, DECELERATION TIME #2 (dEC2)
See Item 29, DECELERATION TIME #1 (dEC1)

Item 41, ACC/DEC PATTERN #2 SELECTION (SCu2)
See Item 30, ACC/DEC PATTERN #1 SELECTION (SCu1)

Item 42, ACC/DEC #1/#2 SWITCHING FREQUENCY (Ad2F)
The drive can be programmed to switch from accel/decel time #1 to accel/decel time #2 based on output frequency. Enter the frequency at which the drive should switch from accel/decel time #1 to accel/decel time #2.

Note for GROUP:FUNDAMENTAL PARAMETERS #2
The parameters in this group are similar to those found in GROUP: FUNDAMENTAL PARAMETERS #1 (Gr.F). These two groups allow the user to program the drive for operation with two different motors (only one motor connected to drive at a time). The user can determine if GROUP: FUNDAMENTAL PARAMETERS #1 (Gr.F) or if GROUP: FUNDAMENTAL PARAMETERS #2 (Gr.F2) is active by setting Item 45, FUNDAMENTAL PARAM SWITCHING (PtP) as desired or by setting one of the drive's input terminal's function to "12" and opening/closing that terminal to the CC terminal. The user can also determine if ACCELERATION TIME #1 (ACC1)/DECELERATION TIME #1 (dEC1) or ACCELERATION TIME #2 (ACC2)/DECELERATION TIME #2 (dEC2) is active by setting Item 46, ACCEL/DECEL #1/#2 SELECTION (Ad2) or by setting one of the drive's input terminal's functions to "9" and opening/closing that terminal to the CC terminal.
See page 9-7 for more information on programming the input terminals.

FUNDAMENTAL PARAMETERS #2 (Gr.F2)

Item 43, DIRECTION SELECTION (FORWARD/REVERSE) (Fr)
This parameter determines direction when commanding start/stop from keypad. Direction can also be changed from the keypad by pressing READ/WRITE and the up or down arrow simultaneously (with Item 43 set to "1").

Item 44, STOP PATTERN SELECTION (StPP)
This parameter determines whether the drive follows the decel curve when the STOP button is pressed or if it performs a coast-stop. Coast stop is also performed when ST-CC is broken.

Item 45, FUNDAMENTAL PARAM SWITCHING (PtP)
This parameter determines whether GROUP: FUNDAMENTAL PARAMETERS #1 (Gr.F) or GROUP: FUNDAMENTAL PARAMETERS #2 (Gr.F2) is used.

Item 46, ACC/DEC #1 OR #2 SELECTION (Ad2)
If the keypad is being used for the RUN/STOP command, then change this parameter to choose which times and pattern are currently utilized. If the drive is getting a run/stop command via the terminal strip (i.e. "F"-"CC" made or "R"-"CC" made), the user can remotely choose which accel/decel is used by the drive by programming one of the input terminal's functions (see items 51-61) to a value of "9" and then closing this terminal to "CC" when acc/dec #2 is to be used. See item 42, ACC/DEC #1/#2 SWITCH FREQUENCY (Ad2F) to change which acc/dec time is used based on drive's output frequency.

Item 47, PANEL RESET SELECTION (PrES)
Use this parameter to limit the type of fault that can be manually reset from the panel:

0: Overcurrents, overloads, overvoltages, and overheat
1: Only overload faults
2: Only overload and overcurrent faults

Item 48, PANEL FEEDBACK CONTROL (PFbC)
Turns feedback on/off when stop/starting from keypad. Option 0 allows keypad to set setpoint. Option 1 turns feedback off, letting keypad act as a regular frequency referrence.

Item 49, SWITCH ON FLY (SFLY)
See Item 5 page 9-1

TERMINAL SELECTION PARAMETERS (Gr.5t)

Item 50 INPUT TERMINAL SELECTION (It)
With this parameter set to "0", the drive's input terminals, when shorted to "CC", have the default functions noted in Items 51 - 62. The user has the option of changing the function assigned to any of the input terminals by programming a "1" into item 50 and programming the parameters in Items 51 - 62 as necessary.

Item 51, "R" INPUT TERMINAL FUNCTION (It0)
Sets the function realized when the "R" terminal is shorted to "CC". Default setting is a reverse run command. See page 9-11 for codes for other available functions.

Item 52, "S1" INPUT TERMINAL FUNCTION (It 1)
Sets the function realized when the "S1" terminal is shorted to "CC". Default setting is firespeed control. See page 9-11 for codes for other available functions.

Item 53, "S2" INPUT TERMINAL FUNCTION (It2)
Sets the function realized when the "S2" terminal is shorted to "CC". Default setting is feedback control. See page 9-11 for codes for other available functions.

Item 54, "S3" INPUT TERMINAL FUNCTION (It3)
Sets the function realized when the "S3" terminal is shorted to "CC". Default setting gives a preset speed reference. See page 9-11 for codes for other available functions.

Item 55, "S4" INPUT TERMINAL FUNCTION (It4)
Different with respect to all of the other input terminals; sets the function realized when the "S4" terminal is open to "CC". When S4 is open to "CC", it is the emergency off command and motor will not run. Default setting is emergency off. See page 9-11 for codes for other available functions.

Item 56, "F" INPUT TERMINAL FUNCTION (It5)
Sets the function realized when the "F" terminal is shorted to "CC". Default setting gives a forward run command. See page 9-11 for codes for other available functions.

Item 57, "RES" INPUT TERMINAL FUNCTION (It6)
sets the function realized when the "RES" terminal is shorted to "CC". Default setting resets a fault. See page 9-11 for codes for other available functions.

Item 58, "ST" INPUT TERMINAL FUNCTION (It7)
sets the function realized when the "ST" terminal is shorted to "CC". Default setting enables the drive. See page 9-11 for codes for other available functions.

Item 59, "S5" INPUT TERMINAL FUNCTION (It8)
sets the function realized when the "S5" terminal is shorted to "CC". Default setting gives a binary speed reference bit. The "S5" terminal is available on the option boards INV3-COM-B and INV3-COM-D. See page 9-11 for codes for other available functions.

Item 60, "S6" INPUT TERMINAL FUNCTION (It9)
sets the function realized when the "S6" terminal is shorted to "CC". Default setting is ACC1/DEC1 or ACC2/DEC2 selection. The "S6" terminal is available on the option boards INV3-COM-B and INV3-COM-D. See page 9-11 for codes for other available functions.

Item 61, "S7" INPUT TERMINAL FUNCTION (It 10)
sets the function realized when the "S7" terminal is shorted to "CC". Default setting is emergency off. The "S7" terminal is available on the option boards INV3-COM-B and INV3-COM-D. See page 9-11 for codes for other available functions.

TERMINAL SELECTION PARAMETERS (Gr.St)

Item 62, POTENTIAL TERMINAL FUNCTION (tt1)
The potential terminal is an imaginary terminal that the drive considers always shorted to "CC".
Any function code from page 9-9 entered here will always be active. For example, if a value of "10" is programmed here, the drive will always ESTOP

Notes on input terminals' functions:

1. If the same function is assigned to more than one input terminal, 'OR' logic is in effect.
2. If none of the input terminals' function is set to "7" (enable), the drive will assume the drive enabled (just like ST-CC is made).

Item 63, R,S1-S7 INPUT TERMINAL RESPONSE TIME (tF)
Use this function to adjust the time between an input terminal's connection to "CC" and the function realization. A setting of "100" results in a delay of about 200 milliseconds.

Item 64, "F" INPUT TERMINAL RESPONSE TIME SELECTION (tSF)
Use this function to adjust the time between an input terminal's connection to "CC" and the function realization. A setting of "100" results in a delay of about 200 milliseconds.

Item 65, "RES" INPUT TERMINAL RESPONSE TIME SELECTION (t6F)
Use this function to adjust the time between an input terminal's connection to "CC" and the function realization. A setting of "100" results in a delay of about 200 milliseconds.

Item 66, "ST" INPUT TERMINAL RESPONSE TIME SELECTION (t7F)
Use this function to adjust the time between an input terminal's connection to "CC" and the function realization. A setting of "100" results in a delay of about 200 milliseconds.

Item 67, "RCH" OUTPUT TERMINAL FUNCTION SELECTION (0t0)
Enter the code from the table on pages 9-11 and 9-12 to determine when drive will change the state of the open collector transistor output.

Item 68, "RCH" OUTPUT TERMINAL DELAY TIME (0t0d)
Sets the delay time from sensing a desired condition to the change in state of the "RCH" open collector transistor output indicating that the condition occurred. Maximum adjustment of "100" is approximately 200 milliseconds.

Item 69, "RCH" OUTPUT TERMINAL HOLD TIME (0t0H)
Example: Suppose the drive is programmed to sense when it is outputting more than 30 Hz. When the output frequency goes above 30 Hz, the open collector transistor will close and the RCH terminal will become a ground. Adjusting this parameter to "100" would keep the RCH terminal floating open for an additional 200 milliseconds after the drive outputted more than 30 Hz.

Item 70, "LOW" OUTPUT CONTACTS FUNCTION SELECTION (0t1)
See item 67 above (except dry relay contacts).

Item 71, "LOW" OUTPUT CONTACTS DELAY TIME (0t1d)
See item 68 above (except dry relay contacts).

Item 72, "LOW" OUTPUT CONTACTS HOLD TIME (0t1H)
See item 69 above (except dry relay contacts).

TERMINAL SELECTION PARAMETERS (Gr.St)

Item 73, "FL" OUTPUT TERMINAL FUNCTION SELECTION (Ot2)
See Item 70 on page 9-8. On the terminal strip of the 230 and 460 volt models, the normally closed contact is between "FLA" and "FLC" and the normally open contact is between "FLB" and "FLC".
On the terminal strip of the 600 volt models, the normally closed contact is between "FLB" and "FLC" and the normally open contact is between "FLA" and "FLC".

Item 74, "FL" OUTPUT TERMINAL DELAY TIME (Ot2d)
See Item 71 on page 9-8.

Item 75, "FL" OUTPUT TERMINAL HOLD TIME (Ot2H)
See Item 72 on page 9-8.

Item 76, "OUT" OUTPUT TERMINAL FUNCTION SELECTION (Ot3)
See Item 70 on page 9-8. Available on INV3-COM-B and INV3-COM-D option boards.

Item 77, "OUT" OUTPUT TERMINAL DELAY TIME (Ot3d)
See Item 71 on page 9-8.

Item 78, "OUT" OUTPUT TERMINAL HOLD TIME (Ot3H)
See Item 72 on page 9-8.

Item 79, LOW SPEED SIGNAL OUTPUT FREQUENCY (LF)
Use this parameter to set the frequency above which one of the outputs changes state.
See Items 67, 70, and 73.

Item 80, ACC/DEC COMPLETE DETECT BAND (brCh)
If one of the open collector output functions is set to "6" (accel/decel complete), use this parameter to output the function when the output frequency is within this bandwidth (minus durring accel, plus during decel) of the frequency command.

Item 81, SPEED REACH MAXIMUM FREQUENCY (HrCh)
Use this parameter to set the output frequency at which one of the outputs changes state during an accceleration. See Items 67, 70, and 73.

Item 82, SPEED REACH MINIMUM FREQUENCY (LrCh)
Use this parameter to set the output frequency at which one of the outputs changes state during a deceleration. See Items 67, 70, and 73.

Item 83, COMMERCIAL POWER/INVERTER SWITCHING OUTPUT (CCHG)
This parameter determines the effect of cycling power on a faulted drive:

1: Motor runs on bypass when drive trips.
2: Motor runs on bypass when a signal is given.
3: Both of the above.

Contact your local Toshiba distributor for information on how to program and wire the drive for this function.

Item 84, COMMERCIAL POWER/INVERTER SWITCHING FREQUENCY (FCHG)
On appropriately equipped drives, use this parameter to determine the drive output frequency reached befor the bypass circuitry is activated.
Contact your local Toshiba distributor for information programming and connecting the drive to utilize this function.

Item 85, "FP" OUTPUT TERMINAL PULSE FREQUENCY (OtFP)
Use this parameter to set the number of pulses per output frequency at the open collector of this output function.

TERMINAL SELECTION PARAMETERS (Cr.St)

Item 86, RR INPUT SPECIAL FUNCTION SELECT (Inrr)
Use this parameter to change the function of the 0-10 volt signal applied to the "RR" terminal:

0: Standard (speed reference)
1: Scale MAXIMUM OUTPUT FREQUENCY (FH) ; Minimum 30 Hz
2: Adjust multiplier on accel/decel times. Zero volts sets the multiplier to 1, 10 volts sets the multplier to 10.
3: Adjust voltage boost. Zero volts sets voltage boost to 0%. 10 volts set the voltage boost to its programmed value.
4: Current limit. Ten volts sets current limit to 150%. Contact your Toshiba distributor for information on how to Torque Current limit.

Suggestion: set one of the monitors (Items 319 - 322) to a value of "14" (RR input value) to see effective MAXIMUM OUTPUT FREQUENCY (FH), accel/decel multiplier, effective voltage boost, or effective STALL PROTECTION CURRENT LEVEL (SEL1 or SEL2).

INPUT TERMINAL FUNCTIONS

The following are the functions that are realized when the appropriate terminal is shorted to "CC" except S4, which should be open to "CC". Program the desired code from the list below into Items 51 - 66.
Contact the factory on how to make a function active when the terminal is disconnected from "CC" (fail-safe).

Code	Function
0	Reverse direction command (default for "R" terminal function)
1	Binary coding for number of preset speed desired. Value: +1
2	Binary coding for number of preset speed desired. Value: +2
3	Binary coding for number of preset speed desired. Value: +4 (default for "S3" terminal function)
4	Binary coding for number of preset speed desired. Value: +8
5	Forward direction command (default for "F" terminal function)
6	Reset faults (momentary falling-edge trigger) (default for "RES" terminal function)
7	Drive enable (default for "ST" terminal function)
8	Jog (also need direction command). See items 128 and 129.
9	Select ACC1/DEC1 (open) or ACC2/DEC2 (closed to "CC")
10	Emergency stop. Also see Item 170, EMERGENCY STOP SELECTION (ESTP).
11	DC injection. When outputting a frequency under DC INJECTION START FREQUENCY (dbF), short terminal to "CC" to inject. See Items 165, 166, and 167. Works in remote mode only.
12	Activate GROUP:FUNDAMENTAL PARAMETERS #1 (Gr.F)(open) or GROUP:FUNDAMENTAL PARAMETERS #2 (Gr.F2) (closed to "CC")
13	PID off (closed to "CC") or on (open)
14	Select Pattern Run #1
15	Select Pattern Run #2
16	Select Pattern Run #3
17	Select Pattern Run #4
18	Pattern Run continue signal
19	Pattern Run step signal
20	Jog forward (includes forward command). See items 127 and 128.
21	Jog reverse (includes reverse command). See items 127 and 128.
22	Bit #0 for binary speed reference (value of MAXIMUM OUTPUT FREQUENCY(FH)/2048)
23	Bit #1 for binary speed reference (value of MAXIMUM OUTPUT FREQUENCY(FH)/1024)
24	Bit #2 for binary speed reference (value of MAXIMUM OUTPUT FREQUENCY(FH)/512)
25	Bit #3 for binary speed reference (value of MAXIMUM OUTPUT FREQUENCY(FH)/256)
26	Bit #4 for binary speed reference (value of MAXIMUM OUTPUT FREQUENCY(FH)/128)
27	Bit #5 for binary speed reference (value of MAXIMUM OUTPUT FREQUENCY(FH)/64)
28	Bit #6 for binary speed reference (value of MAXIMUM OUTPUT FREQUENCY(FH)/32)
29	Bit #7 for binary speed reference (value of MAXIMUM OUTPUT FREQUENCY(FH)/16)
30	Bit #8 for binary speed reference (value of MAXIMUM OUTPUT FREQUENCY(FH)/8)
31	Bit #9 for binary speed reference (value of MAXIMUM OUTPUT FREQUENCY(FH)/4)
32	Bit #10 for binary speed reference (value of MAXIMUM OUTPUT FREQUENCY(FH)/2)
33	no function (use terminal to connect wires)
34	Motor operated pot: increase frequency reference
35	Motor operated pot: decrease frequency reference
36	Motor operated pot: clear frequency reference
37	Three wire control: NO momentary start push button
38	Three wire control: NO momentary stop push button. Contact factory for information on how to realize stop with a NC contact.
39	emulate local/remote mode selection
40	Forward (open) or reverse (closed to "CC") command
41	Run (use in conjunction with code 40 above)

Input terminal functions continued on next page

INPUT TERMINAL FUNCTIONS (cont'd)

Code	Function
42	Binary data write (use with 22-32 above). If no input terminal's function is set to "42", the drive responds immediately to binary references commanded by changing data bits. If one of the input terminal's function is set to "42", the drive responds to binary reference only when terminal is closed to "CC". Binary reference is lost when power is cycled.
43	emulate LOCAL/REMOTE key
44	emulate MANUAL/AUTO key
45	emulate SETUP/PROGRAM/MONITOR key
46	emulate UP key
47	emulate DOWN key
48	emulate READ/WRITE key
49	emulate RUN key
50	emulate STOP key
51	Drive/bypass switching signal
52	Reserved for option
53	give "RR" priority over "IV" and "RX"
54	give "IV" priority over "RR" and "RX"
55	damper status input 1: damper open 0: damper closes
56	Firespeed ON/OFF

OUTPUT TERMINAL FUNCTIONS

Some of the programmable output terminals are dry contact and others are open collector transistor. When refering to the chart below, "contact" may refer to either a dry contact or to an open collector transistor. Refer to the standard connection diagrams on pages 4-1 through 4-5 for the type of output.

Value	Comments
0	Contact will close when drive is at or above Item 7, LOWER LIMIT FREQUENCY (LL)
1	Contact will close when drive is not at or above LL (see value 0 above)
2	Contacts will close when drive is at Item 6, UPPER LIMIT FREQUENCY (UL)
3	Contacts will close when drive is not at UL (see value 2 above)
4	**Default for LOWA/LOWC terminals**. Contact will close when drive is at or above speed in Item 79, LOW SPEED SIGNAL OUTPUT FREQUENCY (LF)
5	Contact will close when drive is not at or above LF (see value 4 above)
6	**Default for RCH terminal**. Open collector transistor applies ground when any accel or decel is complete.
7	Contact closes when any acceleration or deceleration is not complete (see value 6 above).
8	Contact closes when drive is at or above Item 81, SPEED REACH MAXIMUM FREQUENCY (HrCH) during accel or when drive is at or above Item 82, SPEED REACH MINIMUM FREQUENCY (LrCH) during decel
9	Contact closes when drive is not at or above HrCH during accel or when drive is not at or above LrCH during decel (see value 8 above).
10	**Default for FLA/FLB/FLC terminals**. Contact FLA-FLC closes/FLB-FLC opens when drive is powered up and FLA-FLC opens/FLB-FLC closes when drive is faulted (EOFF is not a fault)
11	Contact closes when drive is not faulted.
12	Contact closes when drive is faulted on anything except EARTH FAULT (EF1, EF2) or LOAD END OVERCURRENT (OCL) ("emergency stop" EOFF is not a fault)
13	Contact closes when drive is faulted on EF1, EF2 or OCL (see value 12 above)
14	Contact closes when overcurrent stall is active (use as overcurrent pre-alarm). The stall current level is adjustable via Item 182 (SEL1) or Item 38 (SEL2).
15	Contact closes when overcurrent stall is not active. The stall current level is adjustable via Item 182 (SEL1) or Item 38 (SEL2) (see value 14 above).
16	Contact closes to signify inverter overload pre-alarm. Example of inverter overload: E3 is rated for 110% of rated current for 2 minutes. If drive is operated at 110% of rated current for 60 secs, the inverter overload is at 50%, or half of its overload current-time capability. The drive trips on overload at 100%. Inverter overload pre-alarm starts at 50%.
17	Contact closes to signify drive is not in an overload pre-alarm. See explanation for value 16 above.
18	Contact closes to signify motor overload pre-alarm. See explanation for value 16 above.
19	Contact closes to signify motor is not in an overload pre-alarm. See explanation for value 16 above
20	Contact closes when heatsink reaches 84° C. Contact opens at 80° C after it has closed
21	Contact closes when heatsink is under 84° C. Contact closes at 80° C after it has opened
22	Contact closes when drive is displaying "overvoltage" P. See page 11-7.
23	Contact closes when drive is not displaying "overvoltage" P. See page 11-7.
24	Contact closes when drive is displaying "undervoltage" NOFF. See page 11-7.
25	Contact closes when is not displaying "undervoltage" NOFF. See page 11-7.
26	Contact closes when output current is at or greater than the current programmed into Item 186, LOW CURRENT DETECTION LEVEL (LLPC) for longer than the time programmed in Item 187, LOW CURRENT DETECTION TIME (LLPt)
27	Contact closes when output current is not at or greater than the current programmed into LLPC for longer than the time programmed in LLPt (see value 27 above).
28	Contact closes when torque current equals or exceeds the setting programmed into Item 190, OVERTORQUE TRIP LEVEL (OEL).
29	Contact closes when torque current does not equal or exceed the setting programmed into OEL (see value 28 above).
30	Contact closes when dynamic braking resistor is half way or more into its overload ascalculated by the drive based upon the setting in Item 162, BRAKING RESISTOR VALUE (Pbr) and Item 163, BRAKING RESISTOR POWER RATING (PbCP). See explanation of overload for Value 16.

Output contact functions continued on next page

OUTPUT TERMINAL FUNCTIONS

Value	Comments
31	Contact closes when dynamic braking resistor is less than half way into its overload as calculated by the drive based upon the settings in Pbr and PbCP (see value 30 on previous page).
32	Contact closes when drive is executing an "emergency stop"
33	Contact closes when drive is not executing an "emergency stop"
34	Contact closes when drive is executing a retry
35	Contact closes when the drive is not executing a retry
36	Contact closes when drive is running a Pattern Run
37	Contact closes when drive is not running a Pattern Run
38	Contact closes when the error signal calculated by the drive's PID equals or exceeds the value programmed into Item 273, PID DEVIATION UPPER LIMIT (PuUL) or Item 274, PID DEVIATION LOWER LIMIT (PULL).
39	Contact closes when the error signal calculated by the drive's PID does not equal or exceed the value programmed into PuUL or PULL (see value 38 above).
40	Contact closes when drive is running at or above 0.01 Hz.
41	Contact closes when drive is not running at or above 0.01 Hz.
42	Contact closes when drive is faulted on a "severe" fault (not retryable) *
43	Contact closes when drive is not faulted on a "severe" fault (not retryable) *
44	Contact closes when drive is tripped on a retryable fault *
45	Contact closes when drive is not tripped on a retryable fault *
46	Auto-bypass control. Contact closes to energize coil of output contactor.
47	Opposite logic state (see value 46 above)
48	Auto-bypass control. Contact closes to energize coil of bypass contactor.
49	Opposite logic state (see value 48 above)
50	Contact closes when drive's cooling fan(s) is on.
51	Contact closes when drive's cooling fan(s) is not on.
52	Contact closes when drive is jogging
53	Contact closes when drive is not jogging
54	Contact closes when drive is getting RUN/STOP command from the keypad
55	Contact closes when drive is not getting RUN/STOP command from the keypad
56	Contact closes when drive run time is greater than or equal to time programmed into Item 193, CUMULATIVE RUN TIMER ALARM SETTING (OJt).
57	Contact closes when drive run time is not greater than or equal to time programmed into OJt (see value 56 above)
58	Contact closes when drive trips on a "communication error" ErrS
59	Contact closes when drive does not have a ErrS (see value 58 above)
60	Contact changes state when drive goes through 0.0 Hz to change direction. Contact is closed/ open during forward/reverse run. Contact maintains current condition at 0.0 Hz when decel is complete after a stop command.
61	Contact changes state when drive goes through 0.0 Hz to change direction. Contact is open/ closed during forward/reverse run. Contact maintains current condition at 0.0 Hz when decel is complete after a stop command.
62	Contact closes when drive has a run command and ST-CC is made
63	Contact closes when drive does not have a run command
64	Open/Close damper. Contact close: open damper.
65	Opposite logic state (see value 64 above)
66	IV analog input loss warning. ON: IV lost. Valid when Item 194 (LA IS) adjustment range option: 0 is not selected.
67	Opposite logic state (see value 66 above)

* Retryable faults include:
OVERCURRENT(ACCEL) OC1, OVERCURRENT(DECEL) OC2, OVERCURRENT(RUN) OC3, DC OVERCURENT(ACC) OC1P, DC OVERCURRENT (DEC) OC2P, DC OVERCURRENT(RUN) OC3P, OVERVOLTAGE(ACCEL) OP1, OVERVOLTAGE(DECEL) OP2, OVERVOLTAGE(RUN) OP3, OVERHEAT OH, MOTOR OVERLOAD OLMt, INVERTER OVERLOAD OL In, DBR OVERLOAD TRIP OLr

SPECIAL CONTROL PARAMETERS (Gr.SC)

Item 87, START-UP FREQUENCY (F-St)
Drive's output frequency remains at 0 Hz until reference commands an output frequency greater than (F-St). When the reference is great enough, drive immediately outputs commanded frequency (no accel ramp).

Item 88, END FREQUENCY (F-En)
Drive's output frequency immediately goes to 0 Hz (no decel ramp) when reference commands an output frequency less than or equal to (F-En).

Item 89, RUN FREQUENCY (Frun)
Use in conjunction with Item 90, (FHYS) below. This parameter is the center of the hysteresis band.

Item 90, RUN FREQUENCY HYSTERESIS (FHYS)
Use this parameter as a +/- bandwidth around (Frun). When the reference signal reaches a value that commands a frequency of Frun+Fhys, the drive's output frequency will ramp up to the corresponding frequency. The output will continue to follow the reference until the frequency it is commanding falls below Frun-Fhys, at which time the drive will decel to 0 Hz.

Item 89, (Frun) and Item 90, (FHYS) are not effective when PID control is operating.

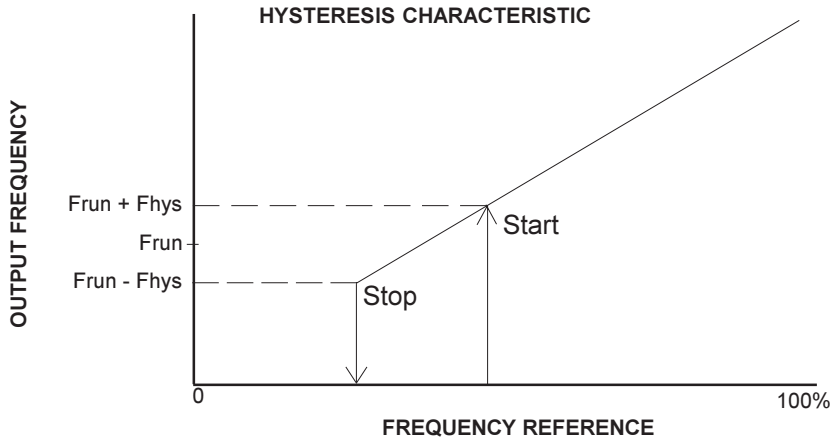

Item 91 JUMP FREQUENCY ENABLE (FJn)
This parameters allows the programming of "Jump Frequencies", which are bands of output frequencies the drive will not continuously output. The drive allows the user to program up to three separate frequencies along with a bandwidth for each.

Item 92 JUMP FREQUENCY #1 (FJ1)
Enter the jump frequency.

Item 93 JUMP FREQUENCY BAND #1 (bFJ1)
Enter the bandwidth for (FJ1). The value entered here will be added to and subtracted from (FJ1) to determine the upper and lower frequencies of the deadband.

Item 94 JUMP FREQUENCY #2 (FJ2)
See Item 92.

SPECIAL CONTROL PARAMETERS (Gr.SC)

Item 95 JUMP FREQUENCY BAND #2 (bFJ2)
See Item 93.

Item 96 JUMP FREQUENCY #3 (FJ3)
See Item 92.

Item 97 JUMP FREQUENCY BAND #3 (bFJ3)
See Item 93.

Example of Jump Frequency:

Suppose (FJ1) is set to 30 Hz and (bFJ1) is set to 5 Hz. Suppose a frequency reference starts commanding 0 Hz and slowly increases. The drive's output frequency slowly increases. When the reference hits a level that is commanding 25 Hz (30 - 5 Hz), the drive's output frequency stays at 25 Hz even though the reference continues to increase. When the reference hits a level that commands 35 Hz (30+5 Hz), the drive accelerates (using the selected acceleration time) from 25 Hz to 35 Hz and continues to increase as the reference increases. During a decel, the drive will "stick" at 35 Hz until the reference hits a level that commands 25 Hz, at which time the drive decelerates (using the selected decel time) from 35 Hz to 25Hz, and resumes following the reference.

Item 98 PWM CARRIER FREQUENCY (CF)
This function sets the maximum drive carrier frequency. The function is inversely proportional and as the output frequency of the drive increases the carrier frequency decreases. For carrier settings above 8KHz a derate is required. Derate its current capability (100%<= 8Khz, 90%>=10Khz).
For more information consult factory.

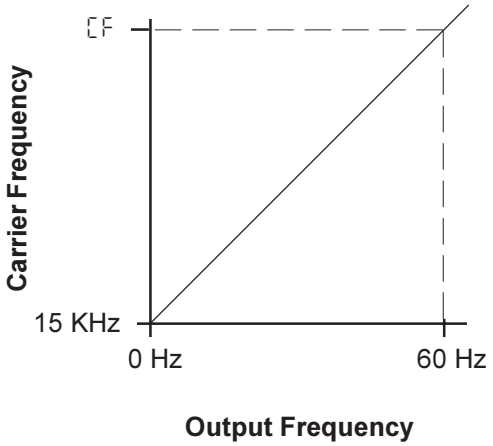

FREQUENCY SETTING PARAMETERS (Gr.5F)

Item 99, FREQUENCY PRIORITY SELECTION #1 (FC 1)
Use this parameter to give one of the drive's frequency setting signals priority over another. Only when the signal set here goes to zero will the drive follow the signal set in Item 81 (HrCh). If the signal selected here becomes non-zero, the drive will follow it and ignore the signal selected in Item 81 (HrCh). Set (FC 1) to option 5 when using motor operated pot (MOP) control or inputting a binary reference via the drive's terminal strip. Preset speeds have priority over "RR" and "RX".

Item 100, FREQUENCY PRIORITY SELECTION #2 (FC2)
Use this parameter to give one of the drive's frequency setting signals priority over another. Only when the signal set in Item 99 (FC 1) goes to zero will the drive follow the signal set here. If the signal selected in (FC 1) becomes non-zero, the drive will follow it and ignore the signal selected in (FC2).

Item 101, ANALOG INPUT FILTER (InF)
Use this parameter to set the amount of filtering applied to the drive's current/voltage frequency reference to dampen noise or resonance problems (option 0 is no filtering and option 3 is maximum filtering).

Item 102, RR INPUT SELECTION (rr In)
Use this parameter to allow adjustment of the RR reference's bias and gain. Item 103 (P 1) and Item 104 (F-P 1) define one point on a % input reference vs. output Hz graph; Items 105 (P2) and 106 (F-P2) define another. The drive varies the output frequency as the input changes according to a line connecting these points. See graph below.
With default programming, drive outputs 40 Hz with 5 volts on the "RR" terminal.

Item 103, RR REFERENCE POINT #1 (P 1)
Use this parameter to set a percentage of reference.

Item 104, RR REF POINT #1 FREQUENCY (F-P 1)
Use this parameter to set the desired drive output frequency when its reference has the value set in Item 103 (P2).

Item 105, RR REFERENCE POINT #2 (P2)
Use this parameter to set a percentage of reference. The "RR" terminal's range is 0-10 volts, so the factory default of 100% corresponds to 10 volts.

Item 106, RR REF POINT #2 FREQUENCY (F-P2)
Use this parameter to set the desired drive output frequency when its reference has the value set in Item 105 (P2).

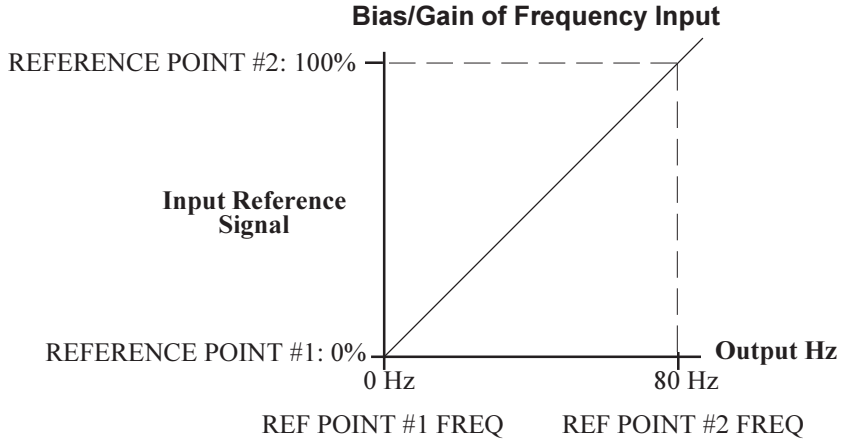

FREQUENCY SETTING PARAMETERS (Gr.SF)

Items 107- 111, IV TERMINAL STANDARD OR ADJUSTABLE (Iu In) - (F-P4)
Use these parameters to allow adjustment of the "IV" reference's bias and gain. See explanation for Items 102 - 106 on preceeding page. With dipswitch in "I" position, drive considers 100% reference = 20 mA (20% would be 4mA). With dipswitch in "V" position, 100% reference = 10 volts. See page 5-2 for dipswitch location.

Items 112 - 116, RX TERMINAL STANDARD OR ADJUSTABLE (rE In) - (F-P6)
Use these parameters to allow adjustment of the "RX" reference's bias and gain. See explanation for Items 107 - 111 above. With dipswitch in "5" position, drive considers 100% reference = 5 volts. With dipswitch in "10" position, 100% reference = 10 volts. See page 5-2 for dipswitch location. Notice that the "RX" reference can be positive or negative, and can represent a positive or negative frequency (direction change).

Items 117 - 121, PG TERMINAL STANDARD OR ADJUSTABLE (PG In) - (F-P8)
Use these parameters to allow adjustment of the "PG" reference's bias and gain. See explanation for Items 112 - 116 above. PG input is available on option cards INV3-COM-B and INV3-COM-D. Notice that the PG reference can be positive or negative, and can represent a positive or negative frequency (direction change).

Items 122 - 126, BINARY INPUT STANDARD OR ADJUSTABLE (bI In) - (F-P8)
Use these parameters to allow adjustment of a binary reference's bias and gain. See explanation for Items 117 - 121 above. Notice that the binary reference can represent a positive or negative frequency (direction change). These bias/gain adjustments apply to terminals programmed with codes 22-32 on page 9-11.

Item 127, JOG RUN FREQUENCY (JOG)
Use this parameter to set the run frequency during a jog. An accel time of zero is used, so low jog frequencies of 5 Hz or less and light loads are recommended. For information on jogging from the keypad, see page 7-13. For information on how to jog from the terminal strip, see pages 8-9 and 9-11. During a jog, low speed, speed reach, and PID, functions do not operate.

Item 128, JOG STOP METHOD (JStP)
This parameter determines the way a jog is stopped. If DC Injection is selected, also adjust Item 165, DC INJECTION STARTING FREQUENCY (dbF), Item 166, DC INJECTION CURRENT (dbC), and Item 167, DC INJECTION TIME (dbt). Jog is stopped by releasing the "RUN" key (when in panel control), and by opening "F"-"CC" or "R"-"CC" (when in remote control).

Item 129, PRESET SPEED SELECTION (Sr.n)
Enter the total number of preset speeds to be accessed.

Item 130, PRESET SPEED MODE ACTIVATION (Sr.M)
If this parameter is set to "1", the corresponding preset speeds' acc/dec time selection, volts per hertz pattern selection, and direction is determined by the setting of (Items 132, 134, 136, etc.)PRESET SPEED #<1,2,3,4,5,6,7,8,9,10,11,12,13,14,or 15> OPERATING MODE (SrM1 - SrMF). Directions commanded by closing "F"-"CC" or "R"-"CC" are effectively ignored. If this parameter is set to "0", the direction is determined by the terminal strip.

Items 131, 133, 135, 137, 139, 141, 143, 145, 147, 149, 151, 153, 155, 157, 159, PRESET SPEED #<1,2,3,4,5,6,7,8,9,10,11,12,13,14,or 15> FREQUENCY FSor, Sr02 - Sr15.
Use this parameter to set preset speed frequencies.

FREQUENCY SETTING PARAMETERS (Gr.SF)

Items 132, 134, 136, 138, 140, 142, 144, 146, 148, 150, 152, 154, 156, 158, 160, PRESET SPEED #<1,2,3,4,5,6,7,8,9,10,11,12,13,14,or 15> OPERATING MODE (SrM1-SrMF)
Use this parameter to associate a direction and ACCELERATION TIME #1 (ACC1)/DECELERATION TIME #1 (dEC1) or ACCELERATION TIME #2 (ACC2)/DECELERATION TIME #2 (dEC2) with a preset speed.

When settings S1=1, S2=2, S3=3, S4=4, the "S1", "S2", "S3", and "S4" terminals (see Items 52 - 55) are preset speed selections via a binary implementation. Some examples:

"S4" to "CC"	"S3" to "CC"	"S2" to "CC"	"S1" to "CC"	Commanded Preset Speed #
closed	open	open	closed	1
closed	open	closed	closed	3
open	closed	open	open	12
closed	closed	open	closed	5
open	closed	closed	closed	15
open	open	open	closed	9
open	open	closed	open	10

A "F"-"CC" or "R"-"CC" closure is necessary to initiate a preset speed run.

CAUTION (ITEM 132) 'Firespeed' does not function in reverse

PROTECTION PARAMETERS (Gr.Pr)

Item 161, DYNAMIC BRAKING SELECTION (Pb)
Adjust this parameter when attaching a dynamic braking resistor to the drive for increased stopping ability. A setting of option 1 affords no protection for the resistor (use for over-sized wattages, or for externally-protected resistors). A setting of option 2 invokes the drive's braking resistor protection (drive will trip on "DBR resistor overload" (OLr) if resistor is overloaded). See Items 162 and 163. For optimum use of the dynamic braking resistor, set Item 164, OVERVOLTAGE STALL PROTECTION (OPSS) to option 1, "off".

Item 162, BRAKING RESISTOR VALUE (Pbr)
Enter ohm value of resistor. See the following tables for recommended DBR sizing.

Item 163, BRAKING RESISTOR POWER RATING (PbCP)
Enter kilowatt value of resistor. See the following tables for recommended DBR sizing.

DYNAMIC BRAKING ***(Feature not available in 460 volt series E3 drives above 20 horsepower)***

When a motor is mechanically forced to spin faster than the output frequency of the drive, the motor acts as a generator. This regenerated energy forces current to flow into the drive's DC bus. The bus capacitors will absorb some of the regenerative energy by charging and raising the DC bus voltage. At high bus voltages, the drive can be programmed to fire the IGBT7 dynamic braking transistor. This prevents a common drive fault, "DC bus overvoltage" (P) . The dynamic braking resistor, attached by the user to the "PA" and "PB" terminals, dissipates the bus energy as heat when the IGBT7 fires. Two resistor values are of concern: resistance (ohms) and power (watts). Insufficient resistance may lead to IGBT7 damage; too low of a wattage may result in braking resistor damage from overheating.

50% Braking Resistor			100% Braking Resistor			20% Braking Resistor			20% Braking Resistor		
Model	Ohms	Watts	Model	Ohms	Watts	Model	Ohms	Watts	Model	Ohms	Watts
2035	101	464	6060	300	1500	2035	152	186	6060	750	300
2055	61	773	6120	150	3000	2055	91	309	6120	375	600
2080	40	1159	6160	100	4500	2080	61	464	6160	250	900
2110	31	1546	6220	75	6000	2110	45	618	6220	190	1200
2160	21	2319	6270	60	7500	2160	30	928	6270	150	1500
2220	16	3092	6330	50	9000	2220	23	1237	6330	125	1800
2270	13	3865	6400	37	12000	2270	18	1546	6400	94	2400
2330	13	4638	6500	30	15000	2330	15	1855	6500	75	3000
100% Braking Resistor			6600	25	18000	2400	24	4638	6600	63	3600
2400	8	23189	6750	20	22500	2500	18	6184	6750	50	4500
2500	6	30919	610K	15	30000	2600	15	7730	610K	38	6000
2600	5	38648	612K	12	37500	20% Braking Resistor			612K	30	7500
100% Braking Resistor						4055	364	309			
4055	121	1546				4080	243	464			
4080	81	2319				4110	182	618			
4110	61	3092				4160	121	928			
4160	40	4638				4220	91	1237			
4220	30	6184									

Contact your Toshiba distributor for dynamic braking resistor part numbers and information.

Item 164, OVERVOLTAGE STALL PROTECTION (OPSS)
This function is turned on as a default setting. Overvoltage stall protection causes the drive to automatically extend the decel time when the DC bus voltage increases due to regeneration. The value stored in DECELERATION TIME #1 (dEC1)/DECELERATION TIME #2 (dEC2) is not changed. The drive may still trip on overvoltage if the decel time is too small.

PROTECTION PARAMETERS (Gr.Pr)

Item 165, DC INJECTION BRAKING START FREQUENCY (dbF)
Use this parameter to set the frequency at which DC injection begins. DC injection can be initiated remotely by programming one of the input terminals appropriately. See Items 51-61 (It0- It 10) and page 9-7.

Item 166, DC INJECTION CURRENT (dbC)
Sets the current level to be employed during DC injection. Current level can be monitored in % of drive rating or in amps. Set the current units in Item 326 (dSPC).

Item 167, DC INJECTION TIME (dbt)
Sets the number of seconds DC is applied to the motor.

> Drive will DC inject approximately 60% FLA continuously, 80% for 100 seconds, and 100% for 2 seconds without an "inverter overload" (OL In) trip.
>
> DC injection is active when the drive's output frequency is below DC INJECTION START FREQUENCY (dbF) and the drive has a STOP command or a zero reference. DC injection is also active when the drive's output frequency is below Item 32, END FREQUENCY (F-En).

Item 168, FWD/REV DC INJECTION PRIORITY CONTROL (dbSL)
When drive is running in forward direction and is given a reverse reference, this parameter determines whether or not DC injection is active between DC INJECTION STARTING FREQUENCY (dbF) and 0 Hz. Setting option 1 gives DC injection priority over a new run command. With an option setting of 0, a new run command has priority over DC injection.

Item 169, MOTOR SHAFT STATIONARY CONTROL (dbLn)
This parameter enables a continuous DC injection into a stopped motor. Amps are set by DC INJECTION CURRENT (dbC)/ 2. Motor shaft stationary control starts after DC injection and continues until "ST"-"CC" is opened, power is turned off, drive emergency stops, or parameter is changed.

Item 170, EMERGENCY STOP SELECTION (EStP)
This parameter determines "emergency stop" (E) method.

Item 171, EMERGENCY STOP DC INJECTION TIME (Edbt)
This is an unique DC injection time for "emergency stops" (E).

Item 172, RETRY SELECTION (rtrY)
The drive can be programmed to restart after a fault occurs. This parameter sets the number of retry attempts. Auto-restart"motor speed search" (Ar-St) is automatically on during retry. Retry will not function if Item 172, FAULT TRIP SAVING (trCL) is set to option 1, "on".

Item 173, TIME BETWEEN RETRY ATTEMPTS (rtt)
Adjust this parameter to set the number of seconds between retry attempts.

CAUTION

Make sure that workers are not exposed to danger from equipment suddenly re-starting when a fault occurs and a retry selection option other than "0" has been selected.

Item 174, REGENERATION POWER RIDE THROUGH CONTROL (UuC)
Models 2080-2110 and 4080-4270 take control power from the DC bus; enabling this function allows use of regeneration energy from the motor to maintain control during a brown-out. Accel/decel times may need to be adjusted to avoid overvolltage trips. ***Always confirm operation.***

PROTECTION PARAMETERS (Gr.Pr)

Item 175, REGENERATION POWER RIDE THROUGH TIME (WoCt)
Use this parameter to limit the ride-through time (effective only if there is sufficient regeneration energy).

Item 176, AUTO-RESTART (MOTOR SPEED SEARCH) (ArSt)
This parameter enables the drive's ability to catch a spinning motor:

0: Speed search off
1: Drive performs speed search after a power glitch
2: Drive performs speed search after "ST"-"CC" is made
3: Both 1 and 2 above

A drive with a forward direction command will catch a reversing motor.

Drive and Motor Overloads
This drive features separate overload curves for itself and the motor. All E3 drives can output 100% of their rated current continuously; current levels above 100% are considered *overload*. The drive overload is fixed: 110% of their rated current for 60 seconds; 150% of their rated current for 0.5 seconds (40 HP or less); 150% of their rated current for 0.3 seconds (50 HP and greater) . The motor's overload curve is defined by Items 177, 178, 179, and output frequency:

Item 177, ELECTRONIC THERMAL PROTECT LEVEL #1 (tHr 1)
Use this parameter to scale the motor overload protection to a specific motor's amp rating. Can be entered in percent or in amps, depending on the setting of Item 326, CURRENT UNITS SELECTION (dSPC). For percent setting, divide motor full load amps by drive full load amps and multiply by 100.

Item 178, OVERLOAD REDUCTION START FREQUENCY (OLF)
The motor overload protection provided by the drive is speed-sensitive by default. With default setting, a drive at 115% of the current set by Item 11, (thr 1) will trip on "motor overload" (OLMt) sooner at 15 Hz than at 60 Hz. Users who have allowed for reduced motor cooling at low speeds can reduce this parameter to get more overload capability. The drive's overload protection is speed sensitive at frequencies below the value entered here.

Item 179, MOTOR 110% OVERLOAD TIME LIMIT (OLt)
This parameter sets the time the drive will output 110% of the current set by Item 11 or Item 177, (tHr 1) before tripping on "motor overload" (OLMt).

Item 180, OVERLOAD SELECTION (OLM)
This parameter adjusts the overload protection scheme.

0: Standard
1: Soft stall on. Soft stall reduces output frequency only when the drive is in its overload region. Soft stall helps prevent drive from tripping on "inverter overload" (OL IM)
2: Motor overload trip off.
3: Soft stall on and motor overload trip off.

Motor overload sensing is "on" unless option 2 or 3 is selected.

"inverter overload" (OL IM) cooling time is approximately one minute after trip
"motor overload" (OLMt) cooling time is approximately five minutes after trip
"DBR overload" (OLr) cooling time is approximately thirty seconds after trip

Item 181, STALL PROTECTION ENABLE #1 (StE 1)
Drive current limits when stall protection enable is set to option 0, "on".

Item 182, STALL PROTECTION LEVEL #1 (StL 1)
Drive will reduce its output frequency and voltage automatically to limit output current to the value programmed here.

PROTECTION PARAMETERS (Gr.Pr)

Item 183, UNDERVOLTAGE TRIP SELECTION (UPSL)
The drive can be programmed to "undervoltage trip" (UP 1) when the DC bus voltage is under a factory-set value by selecting option 1. See Item 184 also. An undervoltage alarm is available in the form of a drive output contact change; see Items 67, 70, or 73 and setting values 24/25 on page 9-13.

Item 184, UNDERVOLTAGE DETECT TIME (UPt)
The DC bus must be low for at least this amount before the drive faults on "undervoltage trip" (UP 1).

Item 185, LOW CURRENT DETECT SELECTION (LLP)
The drive can be programmed to "low current trip" (UC) when its output current is below the value programmed in Item 186 (LLPC) for at least the time programmed in Item 187 (LLPt). Enter option 1 here to enable the low current detection. A low current alarm is available in the form of a drive output contact change; see Items 67, 70, or 73 and setting values 26/27 on page 9-13.

Item 186, LOW CURRENT DETECT LEVEL (LLPC)
Enter the current amount below which the drive will trip and/or close an appropriately-programmed output contact. See Item 326 (dSPC) for settings in % or amps.

Item 187, LOW CURRENT DETECTION TIME (LLPt)
Enter the time the output current must be below the level set in Item 186 (LLPC) before the drive trips and/or closes an appropriately programmed output contact.

Item 188, OUTPUT SHORT-CIRCUIT DETECTION SELECT (OCLS)
To protect itself, the drive does an output short-circuit check every time a run is initiated. This parameter changes the short-circuit check:

0: Standard setting
1: When a low impedance motor is used, this setting desensitizes the short-circuit check, reducing nusiance trips.
2: This setting programs the drive to perform the check at power up only.
3: Combination of 1 and 2 above.
Do not operate the drive on a motor with power factor correction capacitors.

Item 189, OVERTORQUE TRIP SELECTION (OtSL)
Enter a "1" here to program the drive to fault "overtorque trip" (Ot) based on on the torque current amount. See Item 190 (OtL).

Item 190, OVERTORQUE TRIP LEVEL (OtL)
Enter the torque current level (depending on the % or amps setting of Item 326 (dSPC) for settings in % or amps) where the drive trips and/or closes an appropriately programmed output contact. See Items 67, 70, or 73 and setting values 28/29 on page 9-13.

Item 191, FAULT TRIP SAVING (trCL)
This parameter determines the effect of cycling power on a faulted drive:

0: Fault and fault data cleared when drive powers up.
1: Drive powers up in tripped state (drive display remains in faulted state, but fault data and fault contact are not maintained).

Setting of Item 173, NUMBER OF RETRY ATTEMPTS (rtry), is ignored by the drive when this Item is set to option 1.

Item 192, COOLING FAN CONTROL SELECTION (FAn)
This parameter determines if the drive's fan is thermostatically controlled or if it runs continuously.

PROTECTION PARAMETERS (Gr.Pr)

Item 193, CUMULATIVE RUN TIMER ALARM SETTING (OJt)
One of the drive's output contacts can be programmed to change state based upon the time entered here. See Items 67, 70, 73 and setting values 56/57 on page 9-14. ".01" is one hour.

Item 194, IV ANALOG INPUT LOSS FUNCTION (LA15)
This function works when input terminal IV is used for frequency command input. The loss function related parameters are LA15, PO15, and td. IV loss function is selected by properly setting this function. After it is selected, the drive will work in the following ways:

If LA15 is set to 0, it will perform as a normal E3.

If LA15 is not 0, whenever IV signal is lost (defined as when IV signal falls below 10% of full input scale) for a time defined by td (0.3 second to 1.0 second), a warning signal will be on. The warning signal and IV lost status are cleared by reset. The warning signal can be output to an terminal by setting an output terminal at 66 (or 67 for negative logic). In addition to the warning signal, the following will be done according to the LA15 setting:

LA15 =1: run at LL speed if the drive is running before IV lost.

LA15 =2: run at UL speed if the drive is running before IV lost.

LA15 =3: drive trip, and display LOSS whether the motor is running or not.

LA15 =4: run at PO15 % of the frequency at the time the IV lost if the drive is running before IV lost.

The other properties are:

The loss of the IV signal can never start the drive automatically. If the motor stops at the time of IV loss, the motor will stop after IV loss and can not be restarted until reset.

If LL is changed while the IV signal is lost, the drive will follow the lower limit (if LA15 =1).

If the IV signal returns, the drive must be reset to follow the signal; ie, the IV loss status will remain until reset.

Loss function works independent of RUN/STOP commands.

Item 195, PERCENTAGE OF FREQUENCY AT IV LOSS (PO15)
This parameter sets the percentage of frequency where a warning signal will be applied after loss of the IV signal.

Item 196, MINIMUM TIME TO DETECT IV LOSS (td)
This parameter sets the minimum amount of time that must pass before the drive reacts to the loss of the IV signal.

PATTERN RUN PARAMETERS (Gr.Pt)

Pattern Run

The E3 has a feature called pattern run that emulates a low-level PLC. During a pattern run, the drive follows a *pattern group* by running at the user's preset speeds for desired amounts of time in desired directions with desired accel/decel times for a defined number of cycles. The drive has 15 preset speeds, any of which can be assigned to be speeds zero through seven in a pattern group. The drive can hold up to four separate pattern groups, any of which can be remotely selected to run.

Item 197, PATTERN RUN SELECTION (PSEL)
This parameter enables pattern run. When stopping/starting drive from panel, pattern run takes priority over the keypad's frequency reference.

Item 198, PATTERN RUN CONTINUE MODE (PtM)
This parameter determines if a pattern group is continued after a pattern run is stopped and restarted:

0: Pattern group starts over with its first speed
1: Pattern resumes at the time of and with the speed at interruption

Items 199, 208, 217, 226, PATTERN GROUP #<1,2,3, or 4> SPEED #0 (Pt 10)
This parameter determines which preset speed (preset speeds 1 through 15, programmed in odd number Items 131-159 FSor, Sr02 - Sr 15) is the first speed in the pattern group. Unlike the other speeds #1 - #7, speed #0 is not repeated when PATTERN GROUP #<1,2,3, or 4> NUMBER OF CYCLES (PSEL) is greater than one. Set this parameter to "0" to skip this speed.

Items 200, 209, 218, 227, PATTERN GROUP #<1,2,3, or 4> SPEED #1 (Pt 11)
This parameter determines which preset speed (preset speeds 1 through 15, programmed in odd number Items 131-159 FSor, Sr02 - Sr 15) is the next speed in the pattern group. Speed #1 can be but does not have to be Preset Speed #1.

Items 201, 210, 219, 228, PATTERN GROUP #<1,2,3, or 4> SPEED #2 (Pt 12)
This parameter determines which preset speed (preset speeds 1 through 15, programmed in odd number Items 131-159 FSor, Sr02 - Sr 15) is the next speed in the pattern group. Speed #2 can be but does not have to be Preset Speed #2.

Items 202, 211, 220, 229, PATTERN GROUP #<1,2,3, or 4> SPEED #3 (Pt 13)
This parameter determines which preset speed (preset speeds 1 through 15, programmed in odd number Items 131-159 FSor, Sr02 - Sr 15) is the next speed in the pattern group. Speed #3 can be but does not have to be Preset Speed #3.

Items 203, 212, 221, 230, PATTERN GROUP #<1,2,3, or 4> SPEED #4 (Pt 14)
This parameter determines which preset speed (preset speeds 1 through 15, programmed in odd number Items 131-159 FSor, Sr02 - Sr 15) is the next speed in the pattern group. Speed #4 can be but does not have to be Preset Speed #4.

Items 204, 213, 222, 231, PATTERN GROUP #<1,2,3, or 4> SPEED #5 (Pt 15)
This parameter determines which preset speed (preset speeds 1 through 15, programmed in odd number Items 131-159 FSor, Sr02 - Sr 15) is the next speed in the pattern group. Speed #5 can be but does not have to be Preset Speed #5.

Items 205, 214, 223, 232, PATTERN GROUP #<1,2,3, or 4> SPEED #6 (Pt 16)
This parameter determines which preset speed (preset speeds 1 through 15, programmed in odd number Items 131-159 FSor, Sr02 - Sr 15) is the next speed in the pattern group. Speed #6 can be but does not have to be Preset Speed #6.

PATTERN RUN PARAMETERS (Gr.Pt)

Items 206, 215, 224, 233, PATTERN GROUP #<1,2,3, or 4> SPEED #7 (Pt 17)
This parameter determines which preset speed (preset speeds 1 through 15, programmed in odd number Items 131-159 FSor, Sr02 - Sr 15) is the next speed in the pattern group. Speed #7 can be but does not have to be Preset Speed #7.

Items 207, 216, 225, 234, PATTERN GROUP #<1,2,3, or 4> NUMBER OF CYCLES (PtL 1)
This parameter determines how many times the pattern group made up of speeds #1 through #7 entered in the above parameters will be repeated.

Items 235, 237, 239, 241, 243, 245, 247, 249, 251, 253, 255, 257, 259, 261, and 263, SPEED #<1,2,3,4,5,6,7,8,9,10,11,12,13,14,or 15> CONTINUE MODE (SLM1 - SLMF)
This parameter affects the timing of the speeds in a pattern group:

0: Preset speed's time is counted in *seconds* from the beginning of the run (accel/decel time is included in the time entered in the following parameter, SPEED #<1,2,3,4,5,6,7,8,9,10,11,12,13,14,or 15> DRIVE TIME (SLt1 - SLtF)

1: Preset speed's time is counted in *minutes* from the beginning of the run (accel/decel time is included in the time entered in the following parameter, SPEED #<1,2,3,4,5,6,7,8,9,10,11,12,13,14,or 15> DRIVE TIME (SLt1 - SLtF)

2: Preset speed's time is counted in *seconds* after preset speed is reached (accel/decel time is not included in the time entered in the following parameter, SPEED #<1,2,3,4,5,6,7,8,9,10,11,12,13,14,or 15> DRIVE TIME (SLt1 - SLtF)

3: Preset speed's time is counted in *minutes* after preset speed is reached (accel/decel time is not included in the time entered in the following parameter, SPEED #<1,2,3,4,5,6,7,8,9,10,11,12,13,14,or 15> DRIVE TIME (SLt1 - SLtF)

4: Non-stop (stop by breaking ST-CC or F-CC or R-CC).

5: Drive waits for step command to change speeds. See Items 51 - 62 (It0 - It11) and input terminal functions setting code 19 on page 9-11.

Items 236, 238, 240, 242, 244, 246, 248, 250, 252, 254, 256, 258, 260, 262, and 264, SPEED NUMBER <1,2,3,4,5,6,7,8,9,10,11,12,13,14, or 15> DRIVE TIME (SLt1 - SLtF)
This parameter determines the amount of time associated with each *preset* speed. The time unit (minutes/seconds is determined by the preceding parameter.

FEEDBACK PARAMETERS (Gr.Fb)

Item 265, FEEDBACK CONTROL SELECTION (FbP1)
This parameter programs the drive to operate in PID mode (maintain a process variable such as pressure), speed feedback, or in normal mode.

Item 266, FEEDBACK INPUT SIGNAL SELECTION (Fb In)
This parameter programs the drive to accept feedback at one of many possible inputs:

1: "RR" terminal
2: "IV" terminal
3: "RX" terminal
4: Pulse generator input (on option board INV3-COM-B or INV3-COM-D)
5: RS232 port
6: RS485 port or 12 bit input (on option board INV3-COM-A, INV3-COM-C or E3-VF5X-4526A
7: Binary input (via input terminals programmed appropriately - see Items 51 - 62 (It0 - It11) and setting values 22-32 on page 9-11).

Item 267, PROPORTIONAL GAIN (GP)
The larger the value here, the quicker the drive responds to changes in feedback. Contact Toshiba for the PID application guideline. READ/WRITE does not have to be pressed to make the value entered effective.

Item 268, INTEGRAL GAIN (GI)
Also known as reset, this parameter is actually a time. The smaller the value here, the more pronounced the effect of the integral function. Contact Houston for the PID application guideline. READ/WRITE does not have to be pressed to make the value entered effective.

Item 269, ANTI-HUNTING GAIN (GA)
Also known as differential gain or rate, this parameter is actually a time. The larger the value here, the more pronounced the effect of the differential function. Contact Toshiba for the PID application guideline. READ/WRITE does not have to be pressed to make the value entered effective.

Item 270, LAG TIME CONSTANT (GFS)
This parameter effects drive reaction time to a change in feedback. Decrease setting improves response.

Item 271, PID LOWER LIMIT FREQUENCY (PILL)
When PID is active, Item 4, LOWER LIMIT FREQUENCY (LL)is not effective. This parameter is the lower limit when PID is active.

Item 272, PID DEVIATION LIMIT SELECTION (PuL)
The amount of correction calculated by the drive can be limited to control possible system oscillations. Select option 1 to limit PID deviation.

Item 273, PID DEVIATION UPPER LIMIT (PuUL)
The amount of correction calculated by the drive is limited to the value entered here, expressed in terms of percent of Item 19, MAXIMUM OUTPUT FREQUENCY (FH).

Item 274, PID DEVIATION LOWER LIMIT (PuLL)
The amount of correction calculated by the drive is limited to the value entered here, expressed in terms of percent of Item 19, MAXIMUM OUTPUT FREQUENCY (FH).

Item 275, PG INPUT: NUMBER OF PULSES (PG)
When an encoder and PG option board (INV3-COM-B or INV3-COM-D) is being used for closed loop speed control, enter pulses per revolution. When using option board to follow a pulse reference, enter number of pulses that correspond to a frequency command of one hertz.

Item 276, PG INPUT: NUMBER OF PHASES (PGPH)
Use this parameter to select either one or two phase encoder feedback.

FEEDBACK PARAMETERS (Gr.Fb)

Item 277, DROOPING CONTROL ENABLE (drPC)
Use this parameter to enable the drive's load share function, which continuously stalls based on load. This parameter can be changed while the drive is at a non-zero output frequency, but the change does not go into effect until drive is stopped.

Item 278, DROOPING CONTROL AMOUNT (drPt)
This parameter sets the maximum amount of droop as a percentage of Item 19 (FH).

When drooping, Output Frequency = Reference Frequency - Droop
Droop = MAXIMUM OUTPUT FREQUENCY x DROOPING CONTROL AMOUNT x Torque Ratio
Torque Ratio (maximum value of 2.0)= operating torque / rated torque

Item 279, OVERRIDE CONTROL SELECTION (Ord1)
Use this parameter to create a "trim pot". This allows a user to uniquely adjust the speed of a drive that is receiving a master reference. The bias/gain of these inputs determines their effect on the master reference. Select which one of the frequency references will serve as the trim source:

0: none
1: "RR" terminal
2: "IV" terminal
3: "RX" terminal (+/- trim possible)
4: Pulse generator input on option card INV3-COM-B or INV3-COM-D (+/- trim possible)
5: E3 keypad
6: RS485 input or 12-bit input on option cards INV3-COM-A , INV3-COM-C, or G3-VF5X-4526A
7: Trim source with multiplier. See Items 280 (Ord2) and 281 (Ord3) below.

Override Data Flow
This figure is useful to help clarify Items 279, 280, and 281

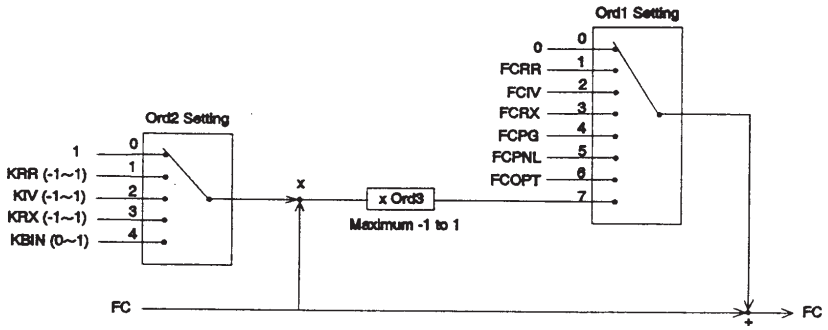

Item 280, OVERRIDE MULTIPLIER INPUT SELECTION (Ord2)
When used with a multiplier, the following inputs' bias and gain do not determine their effect on the master reference. Select which of the following trim sources will be used with the muliplier:

0: Frequency reference
1: "RR" terminal
2: "IV" terminal
3: "RX" terminal
4: RS485 input or 12-bit input on option cards INV3-COM-A, INV3-COM-C, or G3-VF5X-4526A

Item 281, OVERRIDE CHANGE MULTIPLIER (Ord3)
When Item 280 (Ord2) is set to "0", this parameter sets the percent of reference to be added/subtacted to/from the reference. When it is set to option 1, 2, 3, or 4, the value entered here determines the maximum range of trim in terms of percentage of reference. This maximum range of trim includes both positive and negative trim bandwidths. Any amount of trim up to this maximum is available by changing the trim terminal's input. Maximum negative trim is achieved with minimum input on trim terminal. Maximum positive trim is achieved with maximum input on trim terminal.

Example: Suppose Item 280 is set to "1" (RR trim), Item 281 is set to "25%", and a 4-20 mA reference into the "IV" terminal is commanding 40 Hz. When the "RR" input is 0 volts, the drive outputs 35 Hz (40 - ((40 X 0.25)/2)). When the "RR" input is adjusted to 10 volts, the drive outputs 45 Hz (40 + ((40 X 0.25)/2))

COMMUNICATION PARAMETERS (Cr.tr)

Item 282, RS232 BAUD RATE (brt2)
Sets baud rate. Cycle power after changing this parameter.

Item 283, NUMBER OF DATA BITS (SN78)
Sets the word length. Cycle power after changing.

Item 284, PARITY SETTING (SNE0)
Sets the parity. Cycle power after changing this parameter.

Item 285, INVERTER ID NUMBER (Ino)
Assigns unique ID to drive for use on RS485 net. Cycle power after changing this parameter.

Item 286, COMMUNICATION SELECTION (OPt)
Use this parameter to select type of communication:

0: None
1: RS485 port on option boards INV3-COM-A, INV3-COM-C, or INV3-COM-B
2: Toshiba TOSLINE F10 (twisted pair). Contact your Toshiba distributor for more information
3: Toshiba TOSLINE S20 (fiber optic). Contact your Toshiba distributor for more information.
4: 12 bit binary reference using option card G3-VF5X-4526A
5: Three digit BCD input on card E3-VF5X-4526A (0.1 Hz resolution)
6: Three digit BCD input on card E3-VF5X-4526A (1.0 Hz resolution)

Item 287, MASTER/SLAVE SELECTION (MSt)
This parameter defines the drive's role in the master/follower scenario. Option 1 entered here will make slave drives follow the frequency command the master is receiving (master may be stopped while the followers run). Option 2 entered here will make the followers run according to the master's output frequency.

Item 288, RS485 BAUD RATE (brt4)
In conjunction with jumpers J1 ands J2 on the RS485 option board used, this parameter sets the *RS485 baud rate* as follows:

Position of		Setting of Item 288	
J1	**J2**	**0**	**1**
off	off	*9600*	*38400*
on	off	*4800*	*19200*
off	on	*2400*	*9600*
on	on	*1200*	*4800*

INV3-COM-A and INV3-COM-B cards' max baud is 19200.
INV3-COM-C card's max baud is 38400.

Item 289, TOSLINE F10 COMMAND INPUT (M In)
Determines if drive accepts run/stop and/or frequency commands from TOSLINE. Contact Toshiba PLC marketing for more information.

Item 290, TOSLINE F10 MONITOR OUTPUT (MOUt)
Determines the drive operating data to be communicated. Contact Toshiba PLC marketing for more information.

Cycle power after changing any communication parameters.

COMMUNICATION PARAMETERS (Cr.tr)

Item 291, TOSLINE F10/S20 COMM ERROR MODE (MErr)
When set to option 0, a zero speed command is commenced if an error occurs. The data prior to the error is held if option 1 is selected.

Item 292, TOSLINE S20 RECEIVE ADDRESS (InA)
Use this function to set the receive address.

Item 293, TOSLINE S20 TRANSMIT ADDRESS (OUtA)
Use this function to set the transmit address.

Item 294, TOSLINE S20 COMMAND INPUT (S In)
Determines if drive accepts run/stop and/or frequency commands from TOSLINE. Contact Toshiba PLC marketing for more information.

Item 295, TOSLINE S20 MONITOR OUTPUT (SOUt)
Determines the drive operating data to be communicated. Contact Toshiba PLC marketing for more information.

Item 296, TOSLINE S20 REFERENCE FREQUENCY ADDRESS SELECTION (F InS)
Use this function to select for either the reference frequency address or set to receive address + 1.

Item 297, TOSLINE S20 REFERENCE FREQUENCY ADDRESS (F InA)
Use this function to set the reference frequency address.

Item 298, TOSLINE S20 (SErr)
Use this function to set up to clear or retain data on the S20 option board.

Item 299, TOSLINE S20 (Srt)
Use this function to reset the S20 option board.

Items 300-304 , RS485/12-BIT BINARY BIAS, GAIN (tr In) - (F-PH)
Use these parameters to allow adjustment of the RS485 or 12 bit reference's bias and gain. See Items 102-106 for similiar explanation. Slave drive's 100% reference is master's MAXIMUM OUTPUT FREQUENCY (FH), Item 19. RS485 input is available on option cards INV3-COM-A, INV3-COM-B, and INV3-COM-C. 12 bit binary input is available on option card E3-VF5X-4526A.

Cycle power after changing any communication parameters.

AM/FM ADJUSTMENT PARAMETERS (Gr.AM)

Item 305, FM TERMINAL FUNCTION SELECTION (FMSL)
This parameter determines the drive operating variable associated with the 0-1 mA signal from the "FM" and "CC" terminals. ***Do not make connections to this terminal with the drive powered.*** Choices for "FM" terminal's signal's function:

- *0:* (default for "FM"). Pre-compensation reference frequency. This is the drive's internal frequency command and is affected by acc/dec and PID and droop (same as the actual output frequency displayed on the drive's keypad).
- *1:* Post-compensation output frequency may be higher than frequency command (drive overspeeds to compensate for slip in vector control).
- *2:* Frequency command. Use for master/follower. Not affected by stopping or accel/decel.
- *3:* (default for "AM"). Output current. (output amps)^2 =(torque amps)^2+(excitation amps)^2
- *4:* DC bus voltage
- *5:* Output voltage
- *6:* Torque current. (output current)^2 = (torque current)^2 + (excitation current)^2
- *7:* Excitation current. (output current)^2 = (torque current)^2 + (excitation current)^2
- *8:* PID feedback value. This is the frequency represented by the feedback signal
- *9:* Motor overload ratio. Example: Drive is rated for 110% FLA for 1 minutes. If drive runs at 110% for 30 sec, this output will be 50%. Drive trips when ratio hits 100%.
- *10:* Inverter overload ratio. See example for selection 9 above.
- *11:* Dynamic braking resistor overload ratio. See example for selection 9 above.
- *12:* Input power (watts)
- *13:* Output power (watts)
- *14:* Meter calibration setting
- *15:* Peak output current. Peak is reset by cycling power, initiating a run, or resetting drive.
- *16:* Peak input voltage. Peak is reset by cycling power, initiating run, or resetting drive. Calculated from DC bus.

Item 306, FREQUENCY METER ADJUSTMENT (FM)
This setting adjusts the gain of the "FM" terminal. With Item 305 (FMSL) option is set to 14, press the up/down arrows (ignoring parameter value shown) until external meter/system reads the following value for the chosen operating variable:

For *post compensation frequency,* adjust until meter/system reads 75% of Item 1, MAXIMUM OUTPUT FREQUENCY (FH)
For *post-compensation output frequency,* adjust until meter/system reads 75% of Item 1, MAXIMUM OUTPUT FREQUENCY (FH)
For *frequency command,* adjust until meter/system reads 75% of Item 1, MAXIMUM OUTPUT FREQUENCY (FH)
For *output current,* adjust until meter/system reads drive rated amps (or 100%)
For *DC bus voltage,* adjust until meter/system 283 VDC for a 230 V drive or 566 VDC for a 460 V drive.
For *output voltage,* adjust arrows until meter/system reads 200 VAC (or 100%) for a 230 V drive or 400 VAC (or100%) for a 460 V drive.
For *torque current,* adjust arrows until meter/system reads drive rated amps (or 100%).
For *excitation current,* adjust arrows until meter/system reads drive rated amps (or 100%).
For *PID feedback value,* adjust arrows until meter/system reads 75% of Item 1, MAXIMUM OUTPUT FREQUENCY (FH)
For *motor overload ratio,* adjust arrows until meter/system reads 100%.
For *inverter overload ratio,* adjust arrows until meter/system reads 100%.
For *dynamic braking resistor overload ratio,* adjust arrows until meter/system reads 100%.
For *input power,* adjust arrows until meter/system reads 346 X drive FLA for a 230 V drive or 692 X drive FLA for a 460 V drive.

Cont'd on next page

AM/FM ADJUSTMENT PARAMETERS (Gr.AM)

Item 306 *cont'd*, FREQUENCY METER ADJUSTMENT (FM)

For *output power,* adjust arrows until meter/system reads 346 X drive FLA for a 230 V drive or 692 X drive FLA for a 460 V drive.
For *peak output current,* adjust arrows until meter/system reads drive rated amps (or 100%).
For *peak input voltage,* adjust arrows until meter/system reads 200 VAC for a 230 V drive or 400 VAC for a 460 V drive.

Item 307, AM TERMINAL FUNCTION SELECTION (AMSL)
This parameter is programmed like Item 305 (FMSL), but it affects the "AM" terminal.

Item 308, AMMETER ADJUSTMENT (AM)
This parameter is programmed like Item 306 (FM), but it affects the "AM" terminal.

UTILITY PARAMETERS (Gr.Ut)

Item 309, INDUSTRIAL APPLICATION SELECTION (APL)
This parameter can be changed only when the drive's output is 0.0 Hz.When programmed with a non zero value, the drive will initialize itself (prior programming is erased) to parameter values that lend themselves to specific applications. Contact your Toshiba representative for a copy of the Industrial Application Manual which lists the specific parameter setting by application macro. When read, this parameter displays two values; the one on the left is the previous value, while the one on the right is the current value.

Item 310, STANDARD SETTING MODE SELECTION (tYP)
This parameter can be changed only when the drive's output is 0.0 Hz. When read, this parameter displays two values; the one on the left is the previous value, while the one on the right is the current value. This parameter resets the parameter values of the drive as follows:

1: Default drive to typical 50 Hz application settings.
2: Default drive to typical 60 Hz application settings.
3: Default drive to Toshiba factory settings listed in "Factory Setting" column on pages 8-1 through 8-35. Past four faults in the monitor erased.
4: Erase past four faults in the monitor.
5: Save present parameter settings in separate "user" default memory.
6: Default drive to "user" default memory.
7: Clear the "Inv typeform error" (EtYP) which also defaults drive to factory values.

Item 311, COMMAND MODE SELECTION (CMOd)
If SFLY = 0, changes to this parameter go into effect only when the drive is at 0.0 Hz. If SFLY = 1, changes to this parameter go into effect immediately. This parameter determines where the drive looks for a stop/start command:

0: RS232 port
1: E3 terminal strip only (auto run)
2: E3 keypad stop/run buttons only (manual mode)
3: RS485 input on option boards INV3-COM-A, INV3-COM-B, or INV3-COM-C
4: Manual or auto as determined by setting of MANUAL/AUTO button on keypad

Terminal strip enable, reset, and ESTOP commands are always valid, regardless of options setting. With option 2 selected, preset speeds from terminal strip will not function.

Item 312, FREQUENCY MODE SELECTION (FMOd)
If SFLY = 0, changes to this parameter go into effect only when the drive is at 0.0 Hz. If SFLY = 1, changes to this parameter go into effect immediately. This parameter determines where the drive looks for a stop/start command:

0: RS232 port
1: E3 terminal strip only (remote mode)
2: E3 keypad stop/run buttons only (local mode)
3: RS485 or 12 bit binary input on option boards INV3-COM-A, INV3-COM-B, INV3-COM-C, or VF5X-4526A
4: Local or remote as determined by setting of LOCAL/REMOTE button on keypad

Terminal strip enable, reset, and "emergency stop" commands are always valid, regardless of options setting.

UTILITY PARAMETERS (Gr.Ut)

Item 313, PANEL OPERATION MODE SELECTION (PMOd)
Cycle power after changing this parameter.
This parameter limits what can be done via the keypad. Panel "emergency stop" in remote mode is always valid. The values entered here that are zero or are a power of two have one function assigned to them:

0: Keypad does nothing except switching between forward/reverse in manual mode
1: Reset drive fault only
2: Monitor only
4: "emergency stop" only
8: Run/Stop only
16: Read parameters only
32: Change parameters only

The rest of the possible parameter values are combinations of the above.
Note: to "change parameters only", "read parameters only" should also be selected (See option 48)

TO RESET AFTER OPTION "0" HAS BEEN PROGRAMMED IN ITEM 313 (PMOd):

1. Press four keys simultaneously: LOCAL/REMOTE, SPM, R/W, and *up arrow*
2. Drive will return to Item 314 and display : 0
   If : 0 doesn't appear after pressing the four keys, cycle power and try again.
3. Enter pass number between 00 - 99 with up/down arrows and press READ/WRT. Pass number is programmed in Item 314 (PASS).
4. If pass number is entered correctly Item 313 (PMOd) will be reset to option 63, allowing all keypad operations; if entered incorrectly Err will be displayed.

Item 314, PASS NUMBER (PASS)
Incorrect entry of the setting in this parameter prevents resetting keypad lockout (Item 313 (PMOd) set to "0"). Pass number is viewable through RS232 port.

Item 315, CPU VERSION (uCPU)
This read-only parameter displays the processor version.

Item 316, ROM VERSION (urOM)
This read-only parameter display the read-only-memeory version.

Item 317, EEPROM VERSION (uEEP)
This read-only parameter displays the control board EEPROM version.

Item 318, INVERTER TYPEFORM (FOrM)
This read-only parameter identifies the drive model number:

Typeform	Model	Typeform	Model	Typeform	Model	Typeform	Model
24	E3U2035	47	E3U4110	54	E3U425K	70	E3U610K
25	E3U2055	48	E3U4160	55	E3U430K	71	E3U612K
26	E3U2080	49	E3U4220	56	E3U435K		
27	E3U2110	4A	E3U4270	65	E3U6060		
28	E3U2160	4B	E3U4330	67	E3U6120		
29	E3U2220	4C	E3U4400	68	E3U6160		
2A	E3U2270	4D	E3U4500	69	E3U6220		
2B	E3U2330	4E	E3U4600	6A	E3U6270		
2C	E3U2400	4F	E3U4750	6B	E3U6330		
2D	E3U2500	50	E3U410K	6C	E3U6400		
2E	E3U2600	51	E3U412K	6D	E3U6500		
45	E3U4055	52	E3U415K	6E	E3U6600		
46	E3U4080	53	E3U420K	6F	E3U6750		

UTILITY PARAMETERS (Gr.Ut)

Items 319 - 322, STATUS MONITOR #<1,2,3,and 4> SELECT (M0n1) - (M0n4)
Pressing MON button displays the drive's monitor mode. See Item 326 (dSPC) to display currents in amps or percent. See Item 327 (dSPu) to display voltages in volts or percent. The drive operation variable displayed in four of the monitor mode's screens are selectable:

1: Post-compensation output frequency may be higher than frequency command (drive overspeeds to compensate for slip in vector control).
2: Frequency command. Not affected by stopping or accel/decel.
Default for STATUS MONITOR #1 DISPLAY SELECT (M0n1)
3: Output current. (output amps)^2 =(torque amps)^2+(excitation amps)^2
Default for STATUS MONITOR #2 DISPLAY SELECT (M0n2)
4: Input voltage (calculated from DC bus voltage). If displayed in percent, note that 230 V drives consider 200 V to be 100% input and 460 V drives consider 400 V to be 100% input.
Default for STATUS MONITOR #3 DISPLAY SELECT (M0n3)
5: Output voltage. If displayed in percent, note that 230 V drives consider 200 V to be 100% output and 460 V drives consider 400 V to be 100% output.
Default for STATUS MONITOR #4 DISPLAY SELECT (M0n4)
6: Torque current. (output current)^2 = (torque current)^2 + (excitation current)^2
7: Excitation current. (output current)^2 = (torque current)^2 + (excitation current)^2
8: PID feedback value. This is the frequency represented by the feedback signal
9: Motor overload ratio. Example: Drive is rated for 110% FLA for 1 minutes. If drive runs at 110% for 30 sec, this output will be 50%. Drive trips when ration hits 100%.
10: Inverter overload ratio. See example for option 9 above.
11: Dynamic braking resistor overload ratio. See example for option 9 above.
12: Input power
13: Output power
14: "RR" terminal input value. The variable displayed here varies with the setting of Item 86, RR INPUT SPECIAL FUNCTION SELECT (Inrr).
15: Peak output current. Peak is reset by cycling power, initiating a run, or resetting drive.
16: Peak input voltage. Peak is reset by cycling power, initiating run, or resetting drive. Calculated from DC bus. If displayed in percent, note that 230 V drives consider 200 V input to be 100% and that 460 drives consider 400 V input to be 100%.
17: KWH: cumulative kilowatt hour energy
18: MWH: cumulative megawatt hour energy

Item 323, FREQUENCY UNITS SCALE FACTOR (dSP2)
Drive's frequency output display can be scaled by putting a non-zero value here. Drive's display will still read output frequency, but hertz will no longer be visible.

Item 324, FREQUENCY DISPLAY RESOLUTION (dSPF)
Use this parameter to select the number of decimal points for keypad's output frequency display.

Item 325, ACC/DEC TIME UNITS SELECTION (dSPt)
Affects Items 1 (ACC1),2 (dEC1),39 (ACC2), and 40 (dEC2) (sets resolution of accel/decel times).

Item 326, CURRENT UNITS SELECTION (dSPC)
With this parameter set to option 1, drive displays currents in amps.

Item 327, VOLTAGE UNITS SELECTION (dSPu)
With this parameter set to option 0, the voltages displayed in the monitor are in percent.

UTILITY PARAMETERS (Gr.Ut)

Item 328, BLIND FUNCTION SELECTION (bLnd)
Page 8-34 contains the utility parameters that unblind the programming groups. Item 328 must be set to option 1 before Items 329-345 can be read or changed.

Item 329, FUNDAMENTAL PARAMETERS #2 BLIND (bLF2) ***normally blinded***
This parameter must be unblinded before any of the parameters on page 8-3 can be read or changed. Selecting option 1 adds GROUP: FUNDAMENTAL PARAMETERS #2 (Gr.F2) to the visible group list (accessed via the S/P/M button).

Item 330, PANEL CONTROL PARAMETERS BLIND (bLPn) ***normally blinded***
This parameter must be unblinded before any of the parameters on page 8-4 can be read or changed. Selecting option 1 adds GROUP:PANEL CONTROL PARAMETERS (Gr.Pn) to the visible group list (accessed via the S/P/M button).

Item 331, TERMINAL SELECTION PARAMETERS BLIND (bLSt) ***normally visible***
This parameter must remain unblinded before any of the parameters on pages 8-5 through 8-6 can be read or changed. Selecting option 0 adds GROUP:TERMINAL SELECTION PARAMETERS (Gr.St) to the blinded group list (accessed via the PRG button).

Item 332, SPECIAL CONTROL PARAMETERS BLIND (bLSC) ***normally visible***
This parameter must remain unblinded before any of the parameters on page 8-7 can be read or changed. Selecting option 0 adds GROUP:SPECIAL CONTROL PARAMETERS (Gr.SC) to the blinded group list (accessed via the S/P/M button).

Item 333, FREQUENCY SETTING PARAMETERS BLIND (bLSF) ***normally blinded***
This parameter must be unblinded before any of the parameters on pages 8-8 through 8-12 can be read or changed. Selecting option 1 adds GROUP:FREQUEMCY SETTING PARAMETERS (Gr.SF) to the visible group list (accessed via the S/P/M button).

Item 334, PROTECTION FUNCTION PARAMETERS BLIND (bLPr) ***normally visible***
This parameter must remain unblinded before any of the parameters on pages 8-13 through 8-15 can be read or changed. Selecting option 0 adds GROUP:PROTECTION FUNCTION PARAMETERS (Gr.Pr) to the blinded group list (accessed via the S/P/M button).

Item 335, PATTERN RUN CONTROL PARAMETERS BLIND (bLPt) ***normally blinded***
This parameter must be unblinded before any of the parameters on pages 8-16 through 8-21 can be read or changed. Selecting option 1 adds GROUP:PATTERN RUN PARAMETERS (Gr.Pt) to the visible group list (accessed via the S/P/M button).

Item 336, FEEDBACK CONTROL PARAMETERS BLIND (bLFb) ***normally visible***
This parameter must remain unblinded before any of the parameters on pages 8-22 through 8-23 can be read or changed. Selecting option 0 adds GROUP:FEEDBACK PARAMETERS (Gr.Fb) to the blinded group list (accessed via the S/P/M button).

Item 337, COMMUNICATION PARAMETERS BLIND (bLtr) ***normally visible***
This parameter must remain unblinded before any of the parameters on pages 8-24 through 8-28 can be read or changed. Selecting option 0 adds GROUP:COMMUNICATION PARAMENTERS (Gr.tr) to the blinded group list (accessed via the S/P/M button).

UTILITY PARAMETERS (Gr.Ut)

Item 338, INDUSTRIAL APPL: PUMP PARAMETERS BLIND (bL01) ***normally visible***
This parameter must remain unblinded before any of the parameters can be read or changed. Selecting option 0 adds GROUP:INDUSTRIAL APPLICATION - PUMP (Gr.01) to the blinded group list (accessed via the S/P/M button). This group contains parameters from other groups which may be useful when programming the drive for a pump application. Contact your Toshiba representative for the E3 Application Manual for more information on the pump group.

Item 339, INDUSTRIAL APPL: FAN PARAMETERS BLIND (bL02) ***normally visible***
This parameter must remain unblinded before any of the parameters can be read or changed. Selecting option 0 adds GROUP:INDUSTRIAL APPLICATION - FAN (Gr.02) to the blinded group list (accessed via the S/P/M button). This group contains parameters from other groups which may be useful when programming the drive for a fan application. Contact your Toshiba representative for the E3 Application Manual for more information on the fan application group.

Item 340, INDUSTRIAL APPL: COOLING TOWER PARAMETERS BLIND (bL03) ***normally visible***
This parameter must remain unblinded before any of the parameters can be read or changed. Selecting option 0 adds GROUP:INDUSTRIAL APPL - COOLING TOWER (Gr.03) to the blinded group list (accessed via the S/P/M button). This group contains parameters from other groups which may be useful when programming the drive for a cooling tower application. Contact your Toshiba representative for the E3 Application Manual for more information on the cooling tower application group.

Item 341 through 343 Not Applicable.

Item 344, AM/FM ADJUSTMENT PARAMETERS BLIND (bLAM) ***normally visible***
This parameter must remain unblinded before any of the parameters on page 8-30 can be read or changed. Selecting option 0 adds GROUP:AM/FM ADJUSTMENT PARAMETERS (Gr.Ut) to the blinded group list (accessed via the S/P/M button).

Item 345, MOTOR PARAMETERS BLIND (bLMt) ***normally blinded***
This parameter must be unblinded before any of the parameters on page 8-35 can be read or changed. Selecting option 1 adds GROUP:MOTOR PARAMETERS (Gr.Mt) to the visible group list (accessed via the S/P/M button).

MOTOR RATING PARAMETERS (Gr.Mt)

Item 346, NUMBER OF MOTOR POLES (MtP)
Enter number of motor poles.

Item 347, MOTOR RATED CAPACITY (MtC)
Enter motor KW. 1 HP = 0.746 KW.

Item 348, MOTOR TYPE (Mtt)
This parameter describes the motor as follows:

0: Toshiba/Houston EQP3 (premium efficiency)
1: Toshiba/Houston High Efficient (standard efficiency)
2: Non-Toshiba/Houston motor

Item 349, MOTOR RATED VOLTAGE (Mtu)
Enter motor nameplate voltage.

Item 350, MOTOR RATED FREQUENCY (MtF)
Enter motor nameplate frequency.

Item 351, MOTOR RATED RPM (Mtr)
Enter motor nameplate full-load RPM.

Item 352, AUTO-TUNING ENABLE (Mttn)
To auto-tune a motor, enter option 1. When the next run is
initiated, the drive performs an autotuning which lasts a fraction of a second. This function is then reset to "0".

Item 353, LOAD MOMENT OF INERTIA (Mt IH)
Estimate the load's inertia as folows:

0: Small
1: Medium
2: Large
3: Very large
In the event of an "auto-tuning error" (Etn), try a different inertia level.

STANDARD MONITOR MODE DISPLAY PARAMETERS

Item 354, CURRENTLY ACTIVE PATTERN GROUP AND SPEED (Pt + *Displayed value*)
Displays currently active pattern group number and pattern speed (only displayed when in pattern run mode).

Item 355, REMAINING PATTERN GROUP REPETITIONS (n + *Displayed value*)
Displays number of pattern group repititions remaining (only displayed when in pattern run mode).

Item 356, NUMBER OF PRESET SPEEDS (Sr + *Displayed value*)
Displays number of the preset speed being used (only displayed when in pattern run mode).

Item 357, REMAINING PATTERN TIME (: + *Displayed value*)
Displays the pattern time remaining in seconds or minutes (only displayed when in pattern run mode). Display is blank if no pattern time is remaining, or if odd numbered Items 235 - 263 (SLM1 - SLMF) options 4 or 5 are selected.

Item 358, MOTOR ROTATION DIRECTION (Fr-F) or (Fr-r)
Displays the direction of motor rotation.

Item 359, MONITOR #1 POST COMPENSATION OUTPUT FREQUENCY (: + *Displayed value*)
Displays the output frequency before changes are initiated if Item 319 (M0n1) is set to option 1.

Item 360, MONITOR #1 FREQUENCY COMMAND SETTING (: + *Displayed value*)
Displays the new output frequency as it is increased or decreased if Item 319 (M0n1) is set to option 2.

Item 361, MONITOR #1 OUTPUT CURRENT (: C + *Displayed value*)
Displays present output current if Item 319 (M0n1) is set to option 3.
(This is default setting for monitor #1)

Item 362, MONITOR #1 INPUT VOLTAGE (: y + *Displayed value*)
Displays present input voltage if Item 319 (M0n1) is set to option 4.

Item 363, MONITOR #1 OUTPUT VOLTAGE (: P + *Displayed value*)
Displays present output voltage if Item 319 (M0n1) is set to option 5.

Item 364, MONITOR #1 TORQUE CURRENT (: q + *Displayed value*)
Displays present output torque current if Item 319 (M0n1) is set to option 6.

Item 365, MONITOR #1 EXCITATION CURRENT (: E + *Displayed value*)
Displays present excitation current if Item 319 (M0n1) is set to option 7.

Item 366, MONITOR #1 PID FEEDBACK VALUE (: d + *Displayed value*)
Displays present PID feedback frequency value if Item 319 (M0n1) is set to option 8.

Item 367, MONITOR #1 MOTOR OVERLOAD RATIO (: O + *Displayed value*)
Displays present motor overload ratio if Item 319 (M0n1) is set to option 9.

Item 368, MONITOR #1 DRIVE OVERLOAD RATIO (: G + *Displayed value*)
Displays present drive overload ratio if Item 319 (M0n1) is set to option 10.

Item 369, MONITOR #1 DBR OVERLOAD RATIO (: O + *Displayed value*)
Displays present DBR overload ratio if Item 319 (M0n1) is set to option 11.

Item 370, MONITOR #1 INPUT POWER (: h + *Displayed value*)
Displays present input power if Item 319 (M0n1) is set to option 12.

STANDARD MONITOR MODE DISPLAY PARAMETERS

Item 371, MONITOR #1 OUTPUT POWER (: H + *Displayed value*)
Displays present output power if Item 319 (Mon 1) is set to option 13.

Item 372, MONITOR #1 RR INPUT VALUE (: O + *Displayed value*)
Displays present RR input value if Item 319 (Mon 1) is set to option 14.

Item 373, MONITOR #1 PEAK LOAD CURRENT (: c + *Displayed value*)
Displays peak load current if Item 319 (Mon 1) is set to option 15.

Item 374, MONITOR #1 PEAK INPUT VOLTAGE (: u + *Displayed value*)
Displays peak input voltage if Item 319 (Mon 1) is set to option 16.

Item 375, MONITOR #1 KILOWATT HOUR ENERGY (: n + *Displayed value*)
Displays present drive power usage in kilowatts if Item 319 (Mon 1) is set to option 17.

Item 376, MONITOR #1 MEGAWATT HOUR ENERGY (: M + *Displayed value*)
Displays present drive power usage in megawatts if Item 319 (Mon 1) is set to option 18.

Item 377, DISPLAY FUNCTIONS MONITOR #2 (: + *Displayed value*)
See Item 359 - 374 on page 9-39 (display parameters identical to monitor #1
(except default setting is for display of input voltage)

Item 378, DISPLAY FUNCTIONS MONITOR #3 (: + *Displayed value*)
See Item 359 - 374 on page 9-39 (display parameters identical to monitor #1
(except default setting is for display of output voltage)

Item 379, DISPLAY FUNCTIONS MONITOR #4 (: Y + *Displayed value*)
See Item 359 - 374 on page 9-39 (display parameters identical to monitor #1
(except default setting is for display of torque current)

Item 380, INPUT TERMINAL STATUS (*Displays* : A) + *(Displayed value*)
Displays present drive input terminal status. (See input code on page 11-8)

Item 381, INPUT TERMINAL STATUS (: b + *Displayed value*)
Displays present drive input terminal status. (See input code on page 11-8)

Item 382, OUTPUT TERMINAL STATUS (: O + *Displayed value*)
Displays present drive output terminal status. (See output code on page 11-8)

Item 383, TOTAL RUN TIME (: t + *Displayed value*)
Displays total accumulated run time.

Item 384, PAST TRIP #1 (*Displays monitor message*) *(Displayed value*)
Displays inverter trip code alternately with the passed trip number.

Item 385, PAST TRIP #2 (*Displays monitor message*) *(Displayed value*)
Displays inverter trip code alternately with the passed trip number.

Item 386, PAST TRIP #3 (*Displays monitor message*) *(Displayed value*)
Displays inverter trip code alternately with the passed trip number.

Item 387, PAST TRIP #4 (*Displays monitor message*) *(Displayed value*)
Displays inverter trip code alternately with the passed trip number.

Connection Examples: Potentiometer Operation

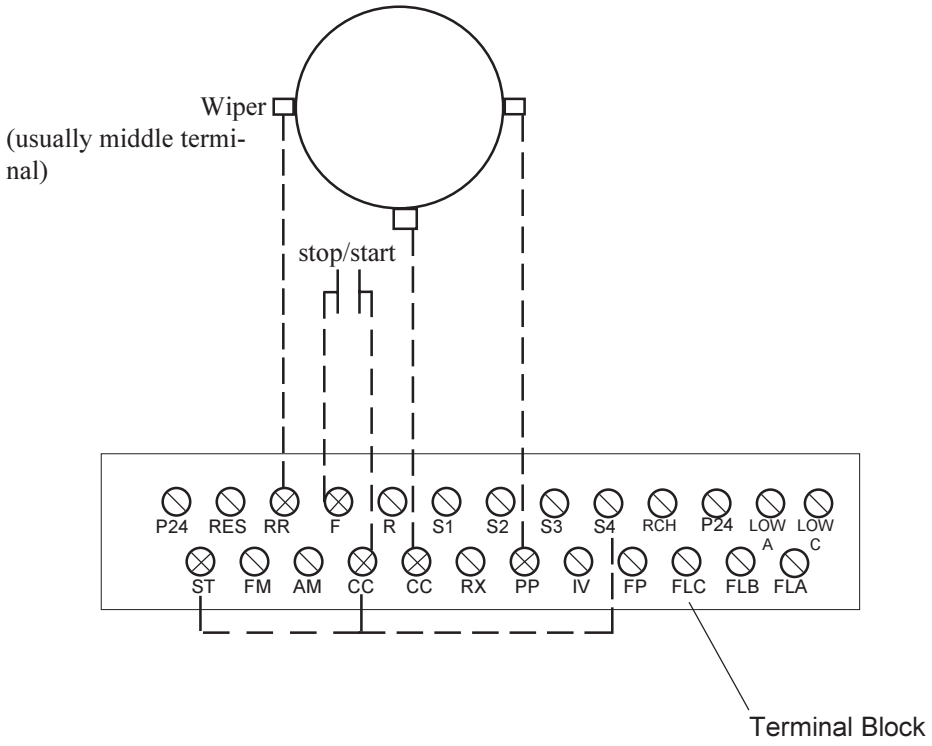

To run from a pot, the drive must have:

1) Drive enable ("ST" to "CC" made).
2) No emergency off command ("S4" to "CC" made).
3) Direction command ("F" or "R" to "CC" made)
4) Frequency reference (wiper from pot is read via "RR" terminal)
5) MANUAL LED off (puts drive in remote mode).
   Toggle the LOCAL/REMOTE button on keypad to turn LOCAL LED off (with drive stopped).

Notes:

1) Use a 3K ohm pot (1 to 10 K ohms will work).
2) The drive will accel to commanded frequency when "F" or "R" to "CC" is made.
3) The drive will decel to 0.0 Hz when "F" or "R" to "CC" is broken.
4) Motor will coast to a stop if "ST" to "CC" is broken.
5) "E" trip if "S4" to "CC" is broken.
6) The above information applies to a drive with factory default programming.

Connection Examples: 4 - 20mA Reference Operation

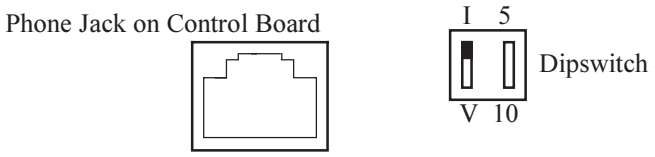

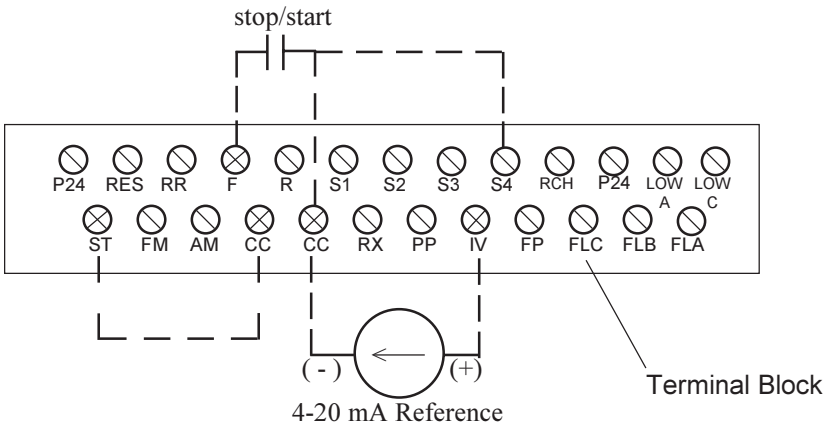

To follow a 4-20 mA signal, the drive must have:

1) "IV" dipswitch to the right of phone jack on control board (immediately under keypad) set to "I" position. "5/10" dipswitch has no effect in this scenario.
2) No emergency off command ("S4" to "CC" made).
3) Drive enable ("ST"-"CC" made)
4) Direction command ("F" or "R" to "CC" made)
5) Frequency reference (4-20 mA signal at "IV" terminal)
6) MANUAL LED off (puts drive in remote mode)
   Toggle the LOCAL/REMOTE button on keypad to turn LOCAL LED off.

Notes:

1) The drive will accel to the commanded frequency when "F" or "R" to "CC" is made.
2) The drive will decel to 0.0 Hz when "F" or "R" to "CC" is broken.
3) Motor will coast to a stop if "ST" to "CC" is broken.
4) "E" trip if "S4" to "CC" is broken.
5) The above information applies to a drive with factory default programming.
6) Do not connect "CC" to ground.

Connection Examples: Keypad Frequency Reference and Remote Stop/Start

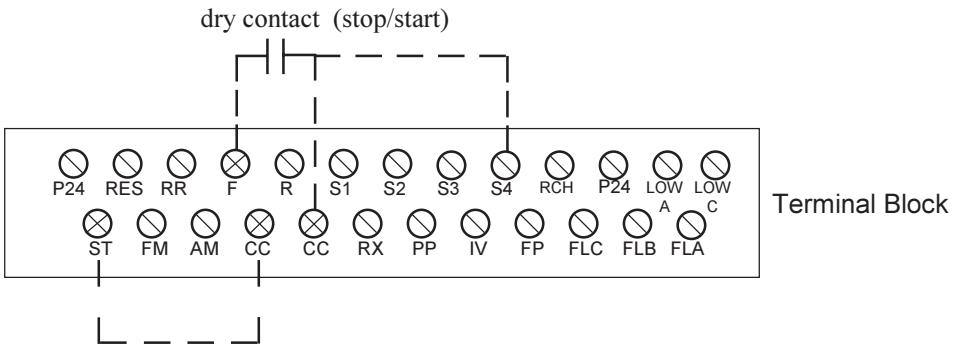

To follow a local (keypad) frequency reference with a auto stop/run, the drive must have:

1) Drive enable ("ST"-"CC" jumpered)
2) No emergency off command ("S4" to "CC" made).
3) Direction command ("F" or "R" to "CC" jumpered)
4) Frequency reference: Adjust on keypad with arrows. Press READ/WRITE to enter.
5) AUTO LED on (puts drive in auto mode)
6) Toggle the LOCAL/REMOTE key on keypad to turn LOCAL LED "on" or
   Programming: Set Item 312, FREQUENCY MODE SELECTION (FMod) to Option 2.
   See page 8-31, 9-33.

Notes:

1) The drive will accel to the commanded frequency when "F" or "R" to "CC" is made.
2) The drive will decel to 0.0 Hz when "F" or "R" to "CC" is broken.
3) Motor will coast to a stop if "ST" to "CC" is broken.
4) "E" trip if "S4" to "CC" is broken.

Connection Examples: RS232 Port

Pinout for E3 RJ11 RS232 port

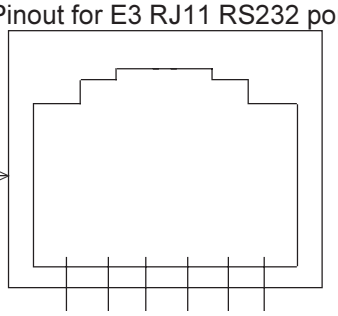

6 5 4 3 2 1

Pinout for DB-9 on computer

(5) (4) (3) (2) (1)
(9) (8) (7) (6)

(looking head-on at male connector that plugs into computer)

Connect DB9 pin 5 to RJ11 pin 3
Connect DB9 pin 3 to RJ11 pin 4
Connect DB9 pin 2 to RJ11 pin 2
Connect DB9 pin 7 to RJ11 pin 6
Connect DB9 pin 8 to RJ11 pin 1
Short DB9 pin 6 to DB9 pin 4
DB9 pin 1 and 9 and RJ11 pin 5 not used

Notes:

1) Free RS232 programming/monitoring software is available from Toshiba. Contact your distributor for a copy and manual.
2) Do not insert/remove the phone plug into/from the E3 port when drive is powered.
3) Common 6 conductor phone cord can be used with an adaptor (6 conductor RJ11 female to DB9 female).
   The adapter is available from your Toshiba distributor or local electrical supply house.
4) "ST"-"CC" must be made.
5) "S4"-"CC" must be made.

Connection Examples: 0-10 volt Reference Operation

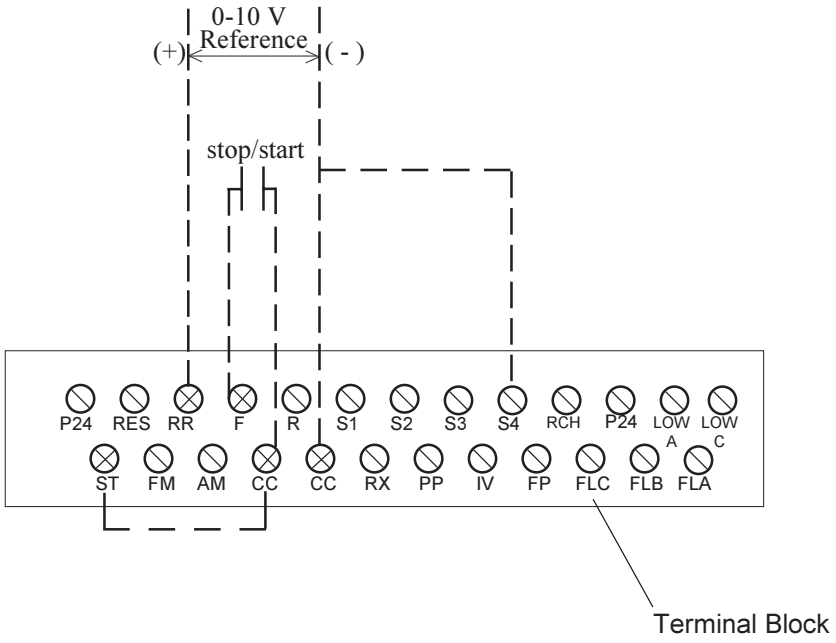

To run from a 0-10 V reference, the drive must have:

1) Drive enable ("ST"-"CC" made).
2) No emergency off command ("S4" to "CC" made).
3) Direction command ("F" or "R" to "CC" made)
4) Frequency reference (0-10 V signal applied to "RR" terminal)
5) MANUAL LED off (puts drive in remote mode).
   Toggle the LOCAL/REMOTE button on keypad to turn LOCAL LED off.

Notes:

1) The drive will accel to commanded frequency when "F" or "R" to "CC" is made.
2) The drive will decel to 0.0 Hz when "F" or "R" to "CC" is broken.
3) Motor will coast to a stop if "ST" to "CC" is broken.
4) The above information applies to a drive with factory default programming.
5) Do not connect "CC" to ground.
6) "E" trip if "S4" to "CC" is broken.

Programming Examples:

Note: The drive will "kick out" of programming mode and return to the "output frequency" display when a parameter name is displayed for fourteen seconds after the previous parameter has been read and written.

See the chart on page 7-7 for a list of all drive groups.

Programming Example 1

Objective: Set ACCELERATION TIME #1 (ACC 1) to 23.4 seconds.
We can change acceleration #1 in SETUP mode or in group FUNDAMENTAL PARAMETERS #1 (Gr.F).
Assume we change the acceleration time #1 in SETUP mode.
Step 1: Press S/P/M key and then R/W key to enter SETUP mode.
Step 2: The first parameter is ACCELERATION TIME #1 (ACC 1) . Press up or down key to adjust the value to 23.4.
Step 3: Press the R/W key to write the new value to EEPROM memory.

Blinding

To make the drive's many parameters more manageable, Toshiba employs "blinded" parameters and "blinded" groups.

BLINDED PARAMETERS
Item 13, STALL PROTECTION LEVEL #1 (SEL 1), is an example of a "blinded" parameter. A blinded parameter is identified in the parameter charts (which start on page 8-1) by its gray shading. A "blinded" parameter is preceded by a parameter that has a shaded choice in the Adjustment Range column like Item 12, STALL PROTECTION ENABLE #1 (SEC 1) . Item 13, (SEL 1), is visible to the programmer only if Item 12, (SEC 1) has the Option set to 0. Note how Adjustment Range 1 is not shaded to indicate this. There are many other blinded parameters in this drive.

BLINDED GROUPS
Of the twenty groups available in the drive, ten are accessible when the drive is programmed with factory defaults and ten are blinded. To adjust a parameter that is not in one of the visible groups, that parameter's group must first be added to the group list. This is done by turning "on" or "off" the BLIND FUNCTION SELECTION (bLnd) parameter located in group UTILITY PARAMETERS (Gr.ut), which is an always visible group.

Search Function

When GROUP: PARAMETERS CHANGED FROM FACTORY DEFAULT (Gr.U) is displayed and READ/WRITE is pressed, the drive will flash Gr.U and display any parameters that have been changed to a value different from the Toshiba factory set defaults. Press READ/WRITE to see the value of the parameter. The parameter can be modified with the up/down arrows. Pressing READ/WRITE again resumes the drive's search.

Programming Examples

Preset Speed Example

The following example uses "S1" and "S2" terminals to access three preset speeds of 11.0 Hz (close "S1"-"CC"), 55.0 Hz (close "S2"-"CC"), and 33.7 Hz (close "S1" and "S2" to "CC"). "F"-"CC" and "ST"-"CC" must be made on the drive's terminal strip. This example assumes Input terminal 1 It1 = 1 and Input terminal 2 It2 = 2 prior to performing the following programming.

Group	Parameter	Value
UTILITY PARAMETERS Gr.Ut	BLIND FUNCTION SELECTION bLnd	1
UTILITY PARAMETERS Gr.Ut	FREQ SETTING PARAMETERS BLIND bLSF	1
FREQ SETTING PARAMETERS Gr.SF	PRESET SPEED SELECTION Sr.n	3
FREQ SETTING PARAMETERS Gr.SF	PRESET SPEED MODE ACTIVATION Sr.M	0
FREQ SETTING PARAMETERS Gr.SF	PRESET SPEED #1 FREQUENCY FSor	11
FREQ SETTING PARAMETERS Gr.SF	PRESET SPEED #1 OPERATING MODE SrM1	0
FREQ SETTING PARAMETERS Gr.SF	PRESET SPEED #2 FREQUENCY Sr02	55
FREQ SETTING PARAMETERS Gr.SF	PRESET SPEED #2 OPERATING MODE SrM2	0
FREQ SETTING PARAMETERS Gr.SF	PRESET SPEED #3 FREQUENCY Sr03	33.7
FREQ SETTING PARAMETERS Gr.SF	PRESET SPEED #3 OPERATING MODE SrM3	0

Trim Pot Example

This example uses the "RX" terminal to trim a reference (i.e. a 4-20 mA input) +7/-5 Hz.

Group	Parameter	Value
UTILITY PARAMETERS Gr.Ut	BLIND FUNCTION SELECTION bLnd	1
UTILITY PARAMETERS Gr.Ut	FEEDBACK CONTROL PARAMETERS BLIND bLFb	1
UTILITY PARAMETERS Gr.Ut	FREQ SETTING PARAMETERS BLIND bLSF	1
FEEDBACK PARAMETERS Gr.Fb	OVERRIDE CONTROL SELECT Ord1	3
FREQ SETTING PARAMETERS Gr.SF	RX TERMINAL STANDARD OR ADJUSTABLE Inrr	1
FREQ SETTING PARAMETERS Gr.SF	RX INPUT REF SETTING POINT #1 P1	0 %
FREQ SETTING PARAMETERS Gr.SF	RX REF POINT #1 OUTPUT FREQUENCY F-P1	7 HZ
FREQ SETTING PARAMETERS Gr.SF	RX INPUT REF SETTING POINT #2 P2	100 %
FREQ SETTING PARAMETERS Gr.SF	RX REF POINT #2 OUTPUT FREQUENCY F-P2	-5 HZ

Motor Operated Pot (MOP) or Floating Point Control

The following programming allows a drive to emulate motor operated pot control. Momentarily shorting "S1"-"CC" increases frequency reference. Momentarily shorting "S2"-"CC" decreases frequency reference. Momentarily shorting "S3"-"CC" erases frequency reference. "F"-"CC" and "ST"-"CC" must be made on the drive's terminal strip. This example assumes drive is defaulted to factory settings prior to the following programming is done.

Group	Parameter	Value
UTILITY PARAMETERS Gr.Ut	BLIND FUNCTION SELECTION bLnd	1
UTILITY PARAMETERS Gr.Ut	FREQ SETTING PARAMETERS BLIND bLSF	1
TERM SELECT PARAMETERS Gr.St	INPUT TERMINAL SELECTION It	1
TERM SELECT PARAMETERS Gr.St	"S1" INPUT TERMINAL FUNCTION It1	34
TERM SELECT PARAMETERS Gr.St	"S2" INPUT TERMINAL FUNCTION It2	35
TERM SELECT PARAMETERS Gr.St	"S3" INPUT TERMINAL FUNCTION It3	36
FREQ SETTING PARAMETERS Gr.SF	FREQUENCY PRIORITY SELECTION #1 FC1	5

Programming Examples (cont'd)

True Torque Control Programming

Although not required for variable torque applications, this drive can be programmed to utilize True Torque Control (TTC), the benefits of which are slip compensation and high torque at low speed. In volts per hertz control (or across the line), a typical AC induction motor will lose 3-5% of its RPM as it goes from no load to full load; when operated in TTC mode, a motor will slow a maximum of 0.5% of base RPM as it is loaded. Motors operated on volts per hertz drives cannot develop their rated torque when operated at low frequencies..

The drive divides the motor current it is providing into two components that are ninety degrees out of phase: the excitation current and the torque current. Excitation current is the part of the total current that develops the magnetic field in the motor's core. The torque current is the current that does the useful work. According to the Pythagorean theorem, (total current)^2 = (torque current)^2 + (excitation current)^2. The drive calculates and controls these currents based on motor models to optimize motor performance.

If a Toshiba/Houston motor is used, the drive will use an on-board motor model. If a generic motor is used, the drive can be programmed to auto-tune. During auto tuning, the drive derives a motor model by applying a voltage to the motor and analyzing the resulting decay.

These parameters must be adjusted to use TTC with a TOSHIBA/HOUSTON motor.

Group	Parameter	Value
UTILITY PARAMETERS Gr.Ut	BLIND FUNCTION SELECTION bLnd	1
UTILITY PARAMETERS Gr.Ut	MOTOR PARAMETERS BLIND bLnt	1
FUNDAMENTAL PARAMETERS #1 Gr.F	VOLTS PER FREQUENCY PATTERN Pt	5
MOTOR PARAMETERS Gr.Mt	NUMBER OF MOTOR POLES Mt.P	*
MOTOR PARAMETERS Gr.Mt	MOTOR RATED CAPACITY Mt.C	*
MOTOR PARAMETERS Gr.Mt	MOTOR TYPE Mt.t	**
MOTOR PARAMETERS Gr.Mt	LOAD MOMENT OF INERTIA Mt.IH	***

The following parameters must be adjusted to use TTC for a GENERIC motor.

Group	Parameter	Value
UTILITY PARAMETERS Gr.Ut	BLIND FUNCTION SELECTION bLnd	1
UTILITY PARAMETERS Gr.Ut	MOTOR PARAMETERS BLIND bLnt	1
FUNDAMENTAL PARAMETERS #1 Gr.F	VOLTS PER FREQUENCY PATTERN Pt	5
MOTOR PARAMETERS Gr.Mt	NUMBER OF MOTOR POLES Mt.P	*
MOTOR PARAMETERS Gr.Mt	MOTOR RATED CAPACITY Mt.C	*
MOTOR PARAMETERS Gr.Mt	MOTOR TYPE Mt.t	2
MOTOR PARAMETERS Gr.Mt	MOTOR RATED VOLTAGE Mt.u	*
MOTOR PARAMETERS Gr.Mt	MOTOR RATED FREQUENCY Mt.t	*
MOTOR PARAMETERS Gr.Mt	MOTOR RATED RPM Mt.r	*
MOTOR PARAMETERS Gr.Mt	AUTO-TUNING ENABLE Mt.tn	1****
MOTOR PARAMETERS Gr.Mt	LOAD MOMENT OF INERTIA Mt.IH	***

* Enter appropriate value from motor's nameplate. KW = 0.746 X HP.
** Enter "0" for an EQPIII or "1" for a high efficiency motor.
**** The drive will auto tune the next time a run is initiated. This parameter is then reset to "0" by the drive.

Requesting Service

When requesting service, report the contents of the following problem information sheet.

Problem Information Sheet

Item		
	Customer's name	
Refer to	Person in charge	
	Address	
	Telephone No.	
Drive spec.	Model No.	
	Serial No.	
	Test No.	
Delivery date		
Time in service		
Date when problem arose		
	Use	
Status of Use	Motor rating	Poles, Hp, V, Hz.
		Made by Toshiba? Made by another company?
		New? Number of units?
		Alternate? Continuous?
	Ambient condition	Indoor? Outdoor? Temperature range?
		Humidity:
		Dust composition and size:
		Presence of salt and extent of corrosion from it:
		Vibrations, in micrometers:
		Presence of corrosive gas:
		Availability of air conditioning:
Phenome-non	Power source	Number of phases:
		Voltage between L1 phase and L2 phase:
		Voltage between L2 phase and L3 phase:
		Voltage between L3 phase and L1 phase:
		Number of Hz:
	State of motor when problem was found	Problem occurred hours after motor had been started. Motor has
		been stopped for hours.
		Problem occurred during periodic inspection?
		Problem occurred when motor was started?
		Problem occurred during acceleration?
		Problem occurred during deceleration?
		Problem occurred while motor was not running?
	Frequency of problem	First time? Problem occurred times in the past.
		Problem occurs sometimes?
		Problem occurs every time motor is operated?
		When did problem first occur?
	Trouble indicator	Indicate LED Message:
Detailed description of problem:		
Temporary diagnosis and corrective action:		
Date defective product shipped:		To:
Deadline for repairs:		

Only qualified personnel should be allowed to service this equipment.

Parts Service Life

In order to obtain the best performance and to get the maximum service life from the drive it is necessary to perform timely maintenance repairs on some parts of the system even though the equipment may still be functioning with no apparent problems.

Use the following service life chart as a guide for major part periodic replacement when the equipment is used in a standard installation service environment.

Service Life Replacement Chart

Part Name	Service Life	Remarks
Large capacity electrolytic capacitor	5 Years	To be electrified semiannually in case of long term disuse.
Cooling Fan	26000 Hours	Internal fans (included on some models)
Contact relays	500,000 operations	
Connectors	100 operations	Replace pin in case of failure.

Troubleshooting

If the drive faults, the following questions may help to pinpoint the reason for the trip:
1. Does the drive trip when accelerating, running, decelerating, or when not running ?
2. Can the drive make it to commanded frequency ?
3. Does the drive trip without the motor attached ?
4. Does drive trip with an unloaded motor ?

Drive data at the time of trip is saved in the monitor and can be read until the trip is cleared. Before clearing the trip, make a note of this information. A history of past faults can be viewed by pressing the MON button and then the down arrow until PAST FAULTs are displayed. Some trips are the result of improper programming; resetting the drive to factory settings may be a solution (see Item 17, STANDARD SETTING MODE SELECTION tYP).

How to clear a fault
1. Cycling power
2. Pressing the STOP/RESET button twice
3. Closing "RES"-"CC" on the terminal strip (with default drive programming).

If Item 191, FAULT TRIP SAVING trCL is set to option "1", the drive will power up with the fault display, but the fault monitor and any fault contacts will be reset. On OVERLOAD trips, reset can occur only after a cooling time; see explanation for Item 14, OVERLOAD SELECTION OLM. No cooling time for reset is required when power is cycled.

RETRY
See Items 172, RETRY SELECTION rtrY and Item 173, RETRY TIME SETTING rtt to program drive to automatically attempt to reset faults. Drive will display rtrY "flashing" during retries. See page 9-14 for a list of faults to retry. Retry will not function if Item 172, rtrY is set to "1" (on).

The keypad, control board (with phone jack), and terminal strip board are common to all drive ratings. If a board or keypad is suspect, exchange with a known good board/keypad to verify.

Drive Fault Displays and Explanations

OVERCURRENT (ACCEL) OC1 or DC OVERCURRENT (ACC) OC1P

Cause: Drive current exceeded 145% of its rated FLA (190% above 100 HP).
Comments: Check for phase-phase short. ACCELERATION TIME ACC1 or ACC2 may be too small. VOLTAGE BOOST vb1 or vb2 may be too high. Is motor/machine jammed? Is mechanical brake engaged while drive is running? If drive is starting into a rotating motor, see Item 176, AUTO-RESTART ArSt . If there is a contactor between motor and drive, wire so that contactor changes state only when drive is outputting 0.0 Hz. Drive will automatically adjust accel time with Item 30, ACC/DEC PATTERN #1 SCu1 set to option "1".

OVERCURRENT (DECEL) OC2 or DC OVERCURRENT (DEC) OC2P

Cause: Drive current exceeded 145% of its rated FLA.
Comments: Check for phase-phase short. DECELERATION TIME dEC1 or dEC2 may be too small. Is motor/machine jammed? Is mechanical brake engaged while drive is running? Adding appropriate braking resistor across "PA" and "PB" terminals may solve problem (see page 9-20). Drive will automatically adjust decel time with Item 30, ACC/DEC PATTERN #1 SCu1 option set to "1".

OVERCURRENT (RUN) OC3 or DC OVERCURRENT (RUN) OC3P

Cause: Drive current exceeded 145% of its rated FLA.
Comments: Check for phase-phase short. Is motor/machine jammed? Is mechanical brake engaged while drive is running? Adding appropriate dynamic braking resistor across "PA" and "PB" terminals may solve problem (see page 9-20). If there are severe load fluctuations, adding mechanical dampening or an output line reactor may help to electrically dampen.

Drive Fault Displays and Explanations (cont'd)

U-PHASE SHORT-CIRCUIT OCA1 or V PHASE SHORT-CIRCUIT OCA2 or W PHASE SHORT-CIRCUIT OCA3

Cause: Drive detected short-circuit in transistor.
Comments: Replace transistor. Contact your Toshiba distributor for authorized repair.

LOAD-END OVERCURRENT OCL

Cause: Drive detected short-circuit on output.
Comments: Check for phase-phase short. Meg motor/leads **with leads disconnected from drive**. Remove any power factor correction caps on motor. See Item 169, OUTPUT SHORT-CIRCUIT DETECTION SELECT.

OVERVOLTAGE (ACCEL) OP1 or OVERVOLTAGE (RUN) OP3

Cause: Bus exceeded 393 VDC (230 volt drive),or 787 VDC (460 volt drive).
Comments: Incoming AC may have gone high or spiked (verify with Item 319,320, 321, or 322 set to option "16"); a line reactor or a lower tap on transformer may help. Motor may be mechanically forced to run faster than drive is commanding; install appropriate dynamic braking resistor (see page 9-20). On eccentric cyclic loads like presses or pump jacks, contact your Toshiba distributor for special programming instructions that may make a DBR unnecessary.

OVERVOLTAGE (DEC) OP2

Cause: Bus exceeded 393 VDC (230 volt drive),or 787 VDC (460 volt drive).
Comments: Incoming AC may have gone high or spiked (verify with Item 319 set to option "16"); a line reactor or a lower tap on transformer may help. Item 2, DECELERATION TIME #1 DCP2 may be too short. Drive will automatically change decel time with Item 31, ACC/DEC PATTERN ADJUST LOW SCL option set to "1". Make sure Item 164, OVERVOLTAGE STALL PROTECTION OPSS is set to option "0". Motor may be mechanically forced to run faster than drive is commanding (due to large load inertias mechanical couplings); install appropriate dynamic braking resistor (see page 9-20). On eccentric cyclic loads like presses or pump jacks, contact your Toshiba distributor for special programming instructions that may make a DBR unnecessary.

INVERTER OVERLOAD OL In

Cause: Drive exceeded 100% of its rated current for too long of a time.
Comments: This trip indicates that the drive output exceeded its rated current for specific amounts of time. For example, drives can output 110% of their rated current for 60 seconds, and 150% for 0.5 seconds. If using DC Injection, Item 166, DC INJECTION CURRENT dbC or Item 167 DC INJECTION TIME dbt they may be too large. If Item 98, PWM CARRIER FREQUENCY CF is greater than 8 KHz, try carrier frequencies less than 8 KHz. Programming Item 14, OVER LOAD SELECTION OLM to option"1" or "3" (soft stall on) makes the drive reduce output frequency/voltage to shed load (works best on variable torque applications). Motor or load bearings may have seized. Enabling True Torque Control (see page 10-7) may reduce drive's current output and solve the problem. Make sure that drive is seeing voltage on all three input phases. Drive may be undersized.

MOTOR OVERLOAD OLMt

Cause: Motor is in danger of overheating because it drew too much current for too long of a time, as determined by the drive.
Comments: See page 8-14. Check Items 178, 179, 180, and 181. If trip occurred at a low frequency, the setting of Item 179, OVERLOAD REDUCTION START FREQUENCY OLF is probably critical. Motor overload protection can be turned off by placing a "2" or "3" in Item 181. Check value in Item 180, MOTOR 110% OVERLOAD TIME LIMIT OLt.

Drive Fault Displays and Explanations (cont'd)

DBR OVERCURRENT OCr

Cause: IGBT7 (dynamic braking transistor) is damaged

Comments: Check ohm value connected to "PA" and "PB" terminals (see page 9-20 for minimum ohm values). If using multiple resistors, make sure parallel-series combination is wired correctly. Check IGBT7. Check DC bus fuse for continuity; if open, check output transistors. Consult your Toshiba distributor for authorized service.

DBR OVERLOAD OLr

Cause: Dynamic braking resistor is in danger of overheating (as determined by drive).

Comments: Check that the values entered into Item 162, BRAKING RESISTOR VALUE Pbr and Item 163, BRAKING RESISTOR CAPACITY PbCP are correct.

OVERHEAT OH

Cause: Drive's heatsink exceeded 90° C.

Comments: Check drive's muffin fans (if any). Clear heatsinks of anything blocking airflow. The enclosure that the drive is installed in may be too small or there may be to many heat sources in the same enclosure. Drive may not have been properly sized for operating altitude. Thermistor on heatsink may be bad.

EMERGENCY OFF E

Cause: Drive received one of the following ESTOP commands:

1. Drive was receiving STOP/RUN command via terminal strip when STOP button on keypad was pressed.
2. One of the drive's input terminal's function is set to "10" (see Item codes 0-56 and page 9-11), and terminal is being opened/closed to command ESTOP.

EEPROM WRITE FAILURE or EEPROM READ FAILURE EEP1, EEP2

Cause: EEPROM was unable to read/write to peripherals.

Comments: Check for miswiring that may be causing noise (such as "CC" connected to ground, an external 10 volt source connected to "PP" etc.) Control board may need to be replaced. See picture of board on page 5-2.

RAM ERROR or ROM ERROR Err3, Err4

Comments: Check for miswiring that may be causing noise (such as "CC" connected to ground, an external 10 volt source connected to "PP" etc.). Replace control board. See picture of board on page 5-2.

OPTION ROM ERROR Err9

Comments: Check for miswiring that may be causing noise (such as "CC" connected to ground, an external 10 volt source connected to "PP" etc.). If drive is energized with option ROM installed and is later energized without option ROM installed, this fault will appear. Reset in normal fashion.

CPU ERROR Err4

Comments: If option ROM or option board is installed or removed when drive is powered, this fault will appear. Reset like any fault. Check for miswiring that may be causing noise (such as "CC" connected to ground, an external 10 volt source connected to "PP" etc.). If the CPU is truly damaged, the fault will not reset and replacement of the control board is necessary. See picture of control board on page 5-2.

COMMUNICATION ERROR Err5

Cause: RS232 or RS485 timer did not respond

Comments: Check wiring to RS232 or RS485 ports. Check setting of Item 286, COMMUNICATION SELECTION OPt (should be option "1" for RS485). Check jumpers J1, J2, and J3 on RS485 option board (see RS485 Communications Option Manual). Cable may be broken.

Drive Fault Displays and Explanations (cont'd)

OPTION PCB ERROR Err8

Comments: If drive is energized with an option board installed and is later energized without the board installed, this fault will appear. Check connectors between control board and option board. Check settings of Item 99, FREQUENCY PRIORITY SELECTION #1 FC1, Item 100, FREQUENCY PRIORITY SELECTION #2 FC2, and Item 286, COMMUNICATION SELECTION OPt. Use stand-offs to secure board.

LOW CURRENT TRIP UC

Cause: The drive's output current went below the current value entered in Item 186, LOW CURRENT DETECT LEVEL LLPC for at least the amount of time entered in Item 187, LOW CURRENT DETECTION TIME LLPt.

UNDERVOLTAGE TRIP UP1

Cause: The drive's DC bus voltage went below 217 VDC (230 V E3), or 413 VDC (460 V E3), for at least the time entered in Item 185, UNDERVOLTAGE DETECT TIME UPt.

Comments: Item 184, UNDERVOLTAGE TRIP SELECTION UPSL turns the ability to undervoltage trip on/off. On models 2080-2110 and 4080-4270, turning on Item 174, REGENERATION POWER RIDE-THROUGH UuC and adjusting Item 175, REGENERATION RIDE-THROUGH TIME UuCt may keep bus up during brown out if there is sufficient regen energy from the load.

OVERTORQUE TRIP Ot

Cause: The drive's torque current went above the current value programmed in Item 190, OVERTORQUE TRIP LEVEL OtL. The drive can be programmed to torque current limit; contact your Toshiba distributor and request the torque limit application guideline.

EARTH FAULT (SOFT) or EARTH FAULT (HARD) EF1, EF2

Cause: Drive detected some current to ground. Depending on rating, drive senses ground fault via ZCT (hard fault) or HCT (soft fault).

Comments: With leads disconnected from drive, meg motor and leads. Look for any moisture that may provide current path to ground. Make sure that control wiring is separated from power wiring. Adding noise supressors on coils of starters on same line as drive may snub noise picked up by ZCT. RF/EMI filter may help remove noise generated by SCR rectifiers in the vicinity. Make sure drive chassis and motor are grounded.

AUTO-TUNING ERROR Etn

Cause: Motor's physical characteristics are not within the window of allowable values to model.

Comments: Try a different inertia setting in Item 353, LOAD MOMENT OF INERTIA Nt.IN. Motor must be at rest to perform auto-tuning. Motor must be one HP size within the drive's HP size. Auto-tuning is best done with motor at full-load temperature (if temperature is very cold, auto-tune error may appear).

GATE ARRAY FAULT Err6

Comments: Replace control board.

CURRENT DETECT ERROR Err7

Comments: Occurs when drive is stopped but CPU detects current flowing. This fault could be caused by plugging in RS232 cable with drive powered (resulting in damage to control board). Adding a RF/EMI filter may remove noise spikes from nearby SCR rectifiers. If the control board is damaged, the drive must be serviced.

INV TYPEFORM ERROR EtYP

Cause: Control board is not configured to drive's rating.

Comments: Enter option "7" into Item 310, STANDARD SETTING MODE SELECTION tYP.

Drive Warning Displays and Explanations

DAMPER TRIP dAMP

Cause: Damper function is selected (one input terminal is assigned to 56 and one output terminal is assigned to 64). Every time a run command is issued, the output terminal will output a signal to open damper. Then waiting for the damper open full signal from the input terminal. After getting the damper open full signal from the input terminal, the motor will start to run. If the damper is closed while the motor is running, go damper trip.
Comments: Check the input damper status signal.

IV ANALOG INPUT LOSS TRIP LOSS

Cause: LA15 = 3 and IV input voltage is less than 1 volt.
Comments: Check IV input voltage.

DC BUS UNDERVOLTAGE MOFF

Cause: The drive's DC bus voltage went below approximately 217 VDC (230 volt drive), or 413 VDC (460 volt drive), for at least the time entered in Item 184, UNDERVOLTAGE DETECT TIME UPt.
Comments: Item 164, UNDERVOLTAGE TRIP SELECTION turns the ability to undervoltage trip on/off.

CONTROL POWER LOW POFF

Control Power low warning voltage levels are sensed on DC bus and are set slightly less than DC BUS UNDERVOLTAGE MOFF levels.

OVERLOAD L

A flashing overcurrent display means that the drive is outputting more than 110% of its rated current. If Item 14, OVERLOAD SELECTION OLM is set to "1" or "3" (soft stall on), the drive's output frequency will automatically decrease in an effort to reduce current. See suggestions for remedying an inverter overload trip on page 11-4. Setting one of the monitor's functions (Items 319-322) to "10" will give an indication of how close a drive is to tripping.

OVERCURRENT C

A flashing overcurrent display means that the drive is stalling. (Stall level is set by Item 13, STALL PROTECTION CURRENT LEVEL SEL1). The drive's output frequency will automatically decrease.

OVERVOLTAGE P

A flashing overvoltage display means that the drive's DC bus has exceeded 360 VDC (230 volt drive), or 720 VDC (460 volt drive).

OVERHEAT H

A flashing overheat display means that the drive's heat sink temperature has exceeded 84°C. Display dissappears when heatsink temperature reaches 80°C.

COMM t

A flashing comm display means that the drive has momentarily lost communications. Display will clear when follower receives valid reference. Cycling power or reinitializing drive will clear warning.

Drive Input and Output Terminal Information Decoding

Input terminal information

The eleven input terminals correspond to the following bits.

'A' group (input terminals 1 to 5)

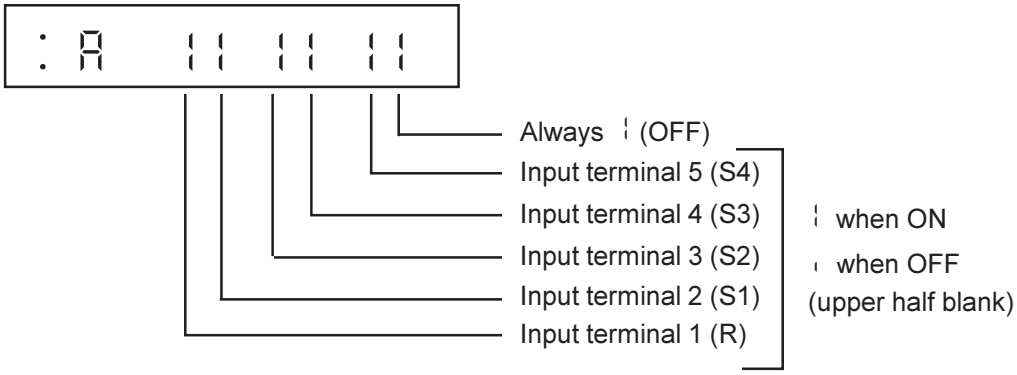

'B' group (input terminals 6 to 11)

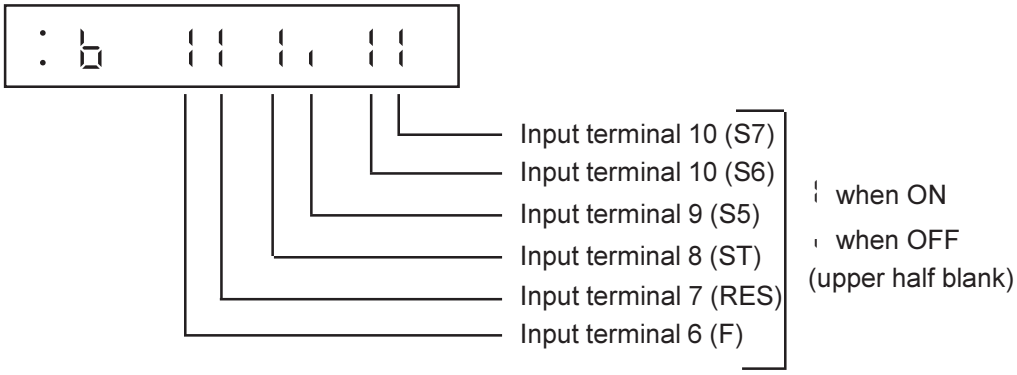

Output terminal information

(Including status display of colling fan and main contactor for initial charging circuit)

The four output terminals correspond to the following bits. The operating status of the cooling fan and main contactor for the initial charging circuit are also displayed.

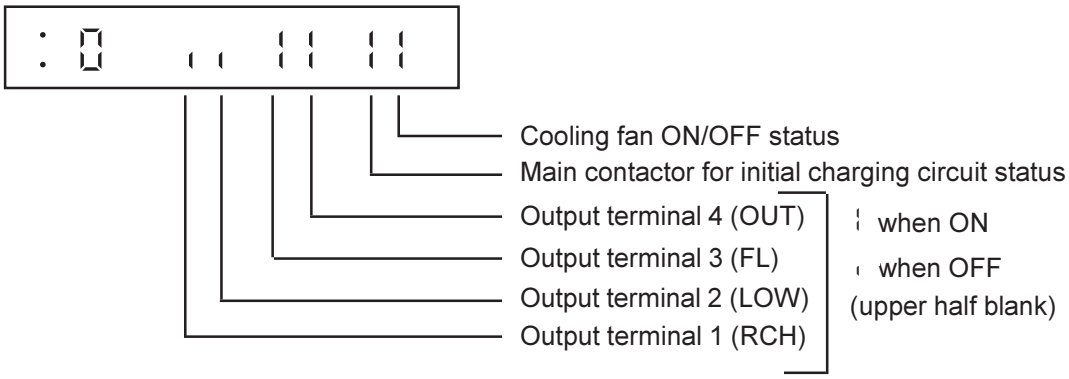

Note:

Output terminal 4 (OUT): Option PCB

Basic Dimensions

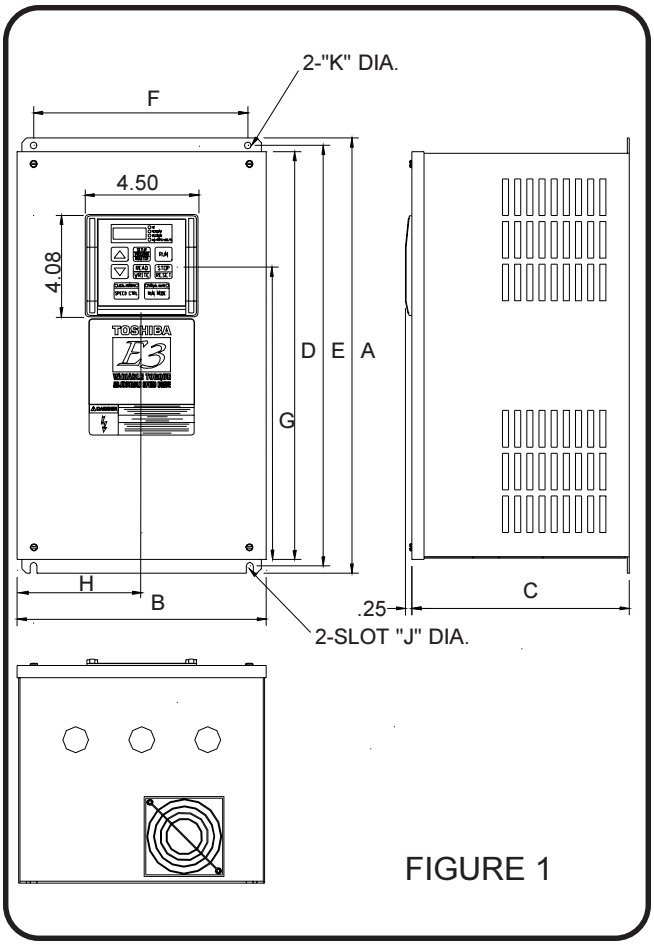

FIGURE 1

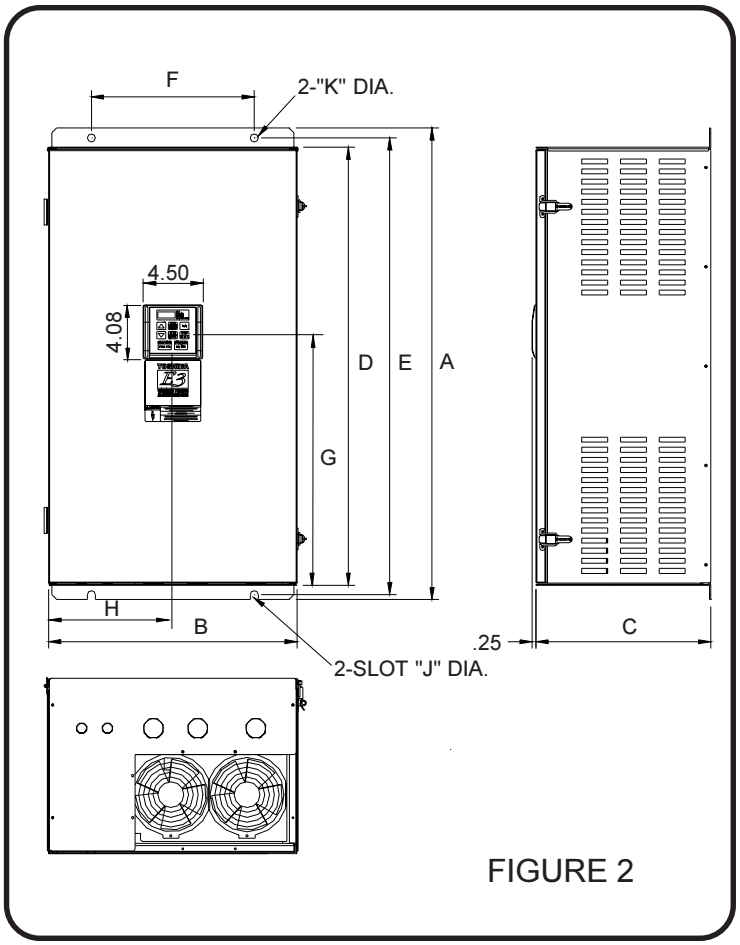

FIGURE 2

DIMENSIONS in inches(millimeters)

MODEL	FIG	A	B	C	D	E	F	G	H	J	K
VT130E3U2035	1	13.13(334)	8.67(220)	7.92(201)	12.10(307)	12.43(316)	7.31(186)	8.08(205)	4.34(110)	.28(7)	.28(7)
VT130E3U2055	1	13.13(334)	8.67(220)	7.92(201)	12.10(307)	12.43(316)	7.31(186)	8.08(205)	4.34(110)	.28(7)	.28(7)
VT130E3U2080	1	17.84(453)	10.22(260)	8.92(227)	16.72(425)	17.25(438)	8.87(225)	12.05(306)	5.11(130)	.28(7)	.28(7)
VT130E3U2110	1	17.84(453)	10.22(260)	8.92(227)	16.72(425)	17.25(438)	8.87(225)	12.05(306)	5.11(130)	.28(7)	.28(7)
VT130E3U2160	1	17.84(453)	10.22(260)	8.92(227)	16.72(425)	17.25(438)	8.87(225)	12.05(306)	5.11(130)	.28(7)	.28(7)
VT130E3U2220	1	21.50(546)	15.41(391)	10.50(267)	19.78(502)	20.63(524)	12.13(308)	10.68(271)	7.96(202)	.44(11)	.44(11)
VT130E3U2270	1	21.50(546)	15.41(391)	10.50(267)	19.78(502)	20.63(524)	12.13(308)	10.68(271)	7.96(202)	.44(11)	.44(11)
VT130E3U2330	1	21.50(546)	15.41(391)	10.50(267)	19.78(502)	20.63(524)	12.13(308)	10.68(271)	7.96(202)	.44(11)	.44(11)
VT130E3U2400	2	32.50(826)	19.25(489)	13.56(344)	29.56(751)	31.34(796)	12.63(321)	20.52(521)	9.63(245)	.63(16)	.63(16)
VT130E3U2500	2	32.50(826)	19.25(489)	13.56(344)	29.56(751)	31.34(796)	12.63(321)	20.52(521)	9.63(245)	.63(16)	.63(16)
VT130E3U2600	2	36.50(927)	19.25(489)	13.56(344)	33.56(852)	35.34(898)	12.63(321)	22.52(572)	9.63(245)	.63(16)	.63(16)
VT130E3U4055	1	14.64(372)	8.67(220)	7.92(201)	13.53(344)	14.06(357)	7.31(186)	9.56(243)	4.34(110)	.28(7)	.28(7)
VT130E3U4080	1	14.64(372)	8.67(220)	7.92(201)	13.53(344)	14.06(357)	7.31(186)	9.56(243)	4.34(110)	.28(7)	.28(7)
VT130E3U4110	1	14.64(372)	8.67(220)	7.92(201)	13.53(344)	14.06(357)	7.31(186)	9.56(243)	4.34(110)	.28(7)	.28(7)
VT130E3U4160	1	17.84(453)	10.22(260)	8.92(227)	16.72(425)	17.25(438)	8.87(225)	12.05(306)	5.11(130)	.28(7)	.28(7)
VT130E3U4220	1	17.84(453)	10.22(260)	8.92(227)	16.72(425)	17.25(438)	8.87(225)	12.05(306)	5.11(130)	.28(7)	.28(7)
VT130E3U4270	1	18.63(473)	15.41(391)	10.50(267)	17.28(439)	17.94(456)	12.13(308)	8.46(215)	7.96(202)	.38(10)	.38(10)
VT130E3U4330	1	18.63(473)	15.41(391)	10.50(267)	17.28(439)	17.94(456)	12.13(308)	8.46(215)	7.96(202)	.38(10)	.38(10)
VT130E3U4400	1	21.50(546)	15.41(391)	10.50(267)	19.78(502)	20.63(524)	12.13(308)	10.68(271)	7.96(202)	.44(11)	.44(11)
VT130E3U4500	1	21.50(546)	15.41(391)	10.50(267)	19.78(502)	20.63(524)	12.13(308)	10.68(271)	7.96(202)	.44(11)	.44(11)
VT130E3U4600	2	32.50(826)	19.25(489)	13.56(344)	29.56(751)	31.34(796)	12.63(321)	20.52(521)	9.63(245)	.63(16)	.63(16)
VT130E3U4750	2	32.50(826)	19.25(489)	13.56(344)	29.56(751)	31.34(796)	12.63(321)	20.52(521)	9.63(245)	.63(16)	.63(16)
VT130E3U410K	2	32.50(826)	19.25(489)	13.56(344)	29.56(751)	31.34(796)	12.63(321)	20.52(521)	9.63(245)	.63(16)	.63(16)
VT130E3U412K	2	36.50(927)	19.25(489)	13.56(344)	33.56(852)	35.34(898)	12.63(321)	22.52(572)	9.63(245)	.63(16)	.63(16)

Basic Dimensions

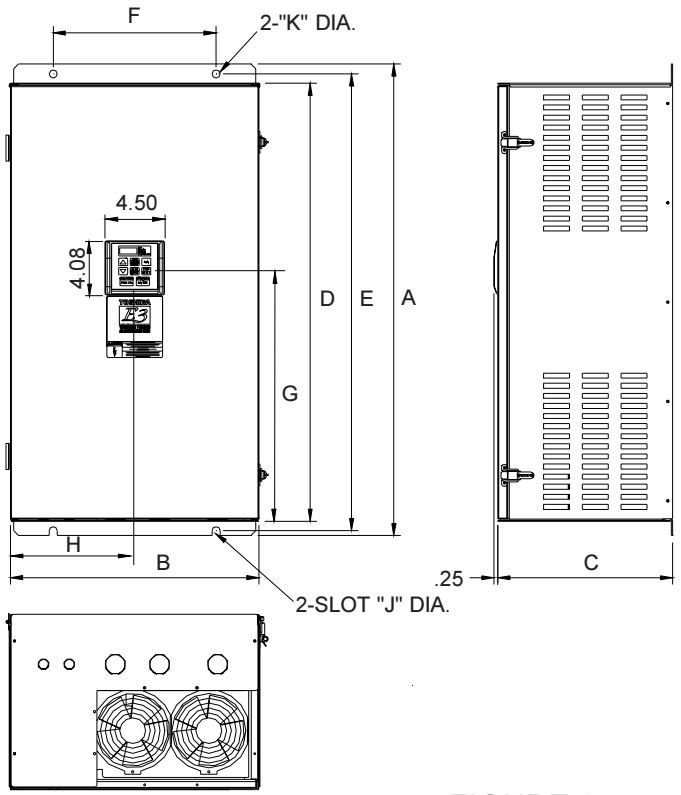

FIGURE 3

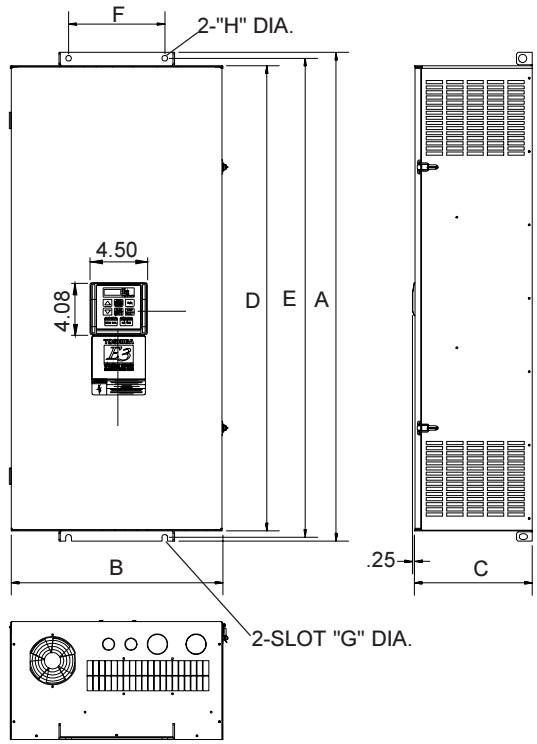

FIGURE 4

DIMENSIONS in inches(millimeters)

MODEL	FIG	A	B	C	D	E	F	G	H	J	K
VT130E3U415K	3	57.00(1448)	19.25(489)	13.16(334)	54.16(1376)	55.81(1418)	12.63(321)	26.95(685)	9.62(244)	.69(18)	.69(18)
VT130E3U420K	3	57.00(1448)	19.25(489)	13.16(334)	54.16(1376)	55.81(1418)	12.63(321)	26.95(685)	9.62(244)	.69(18)	.69(18)
VT130E3U425K	3	57.00(1448)	19.25(489)	13.16(334)	54.16(1376)	55.81(1418)	12.63(321)	26.95(685)	9.62(244)	.69(18)	.69(18)
VT130H3U430K	4	59.94(1522)	25.88(657)	14.47(368)	57.00(1448)	58.75(1492)	11.81(300)	n/a	n/a	.69(18)	.69(18)
VT130E3U6060	3	18.75(476)	14.38(365)	9.94(252)	17.13(435)	18.09(459)	11.25(286)	10.34(263)	7.87(200)	.38(10)	.38(10)
VT130E3U6120	3	20.75(527)	14.38(365)	9.94(252)	19.13(486)	20.09(510)	11.25(286)	10.84(275)	7.87(200)	.38(10)	.38(10)
VT130E3U6160	3	23.63(600)	17.38(441)	11.50(292)	21.63(549)	22.75(578)	14.25(362)	14.84(377)	9.38(238)	.50(13)	.50(13)
VT130E3U6220	3	23.63(600)	17.38(441)	11.50(292)	21.63(549)	22.75(578)	14.25(362)	14.84(377)	9.38(238)	.50(13)	.50(13)
VT130E3U6270	3	23.63(600)	17.38(441)	11.50(292)	21.63(549)	22.75(578)	14.25(362)	14.84(377)	9.38(238)	.50(13)	.50(13)
VT130E3U6330	3	36.50(927)	19.25(489)	13.56(344)	33.88(861)	35.34(898)	12.63(321)	21.49(546)	9.13(232)	.63(16)	.63(16)
VT130E3U6400	3	36.50(927)	19.25(489)	13.56(344)	33.88(861)	35.34(898)	12.63(321)	21.49(546)	9.13(232)	.63(16)	.63(16)
VT130E3U6500	3	36.50(927)	19.25(489)	13.56(344)	33.88(861)	35.34(898)	12.63(321)	21.49(546)	9.13(232)	.63(16)	.63(16)
VT130E3U6600	3	36.50(927)	19.25(489)	13.56(344)	33.88(861)	35.34(898)	12.63(321)	21.49(546)	9.13(232)	.63(16)	.63(16)
VT130E3U6750	3	36.50(927)	19.25(489)	13.56(344)	33.88(861)	35.34(898)	12.63(321)	21.49(546)	9.13(232)	.63(16)	.63(16)
VT130E3U610K	3	57.00(1448)	19.25(489)	13.16(334)	54.16(1376)	55.81(1418)	12.63(321)	26.95(685)	9.62(244)	.69(18)	.69(18)
VT130E3U612K	3	57.00(1448)	19.25(489)	13.16(334)	54.16(1376)	55.81(1418)	12.63(321)	26.95(685)	9.62(244)	.69(18)	.69(18)

Basic Dimensions

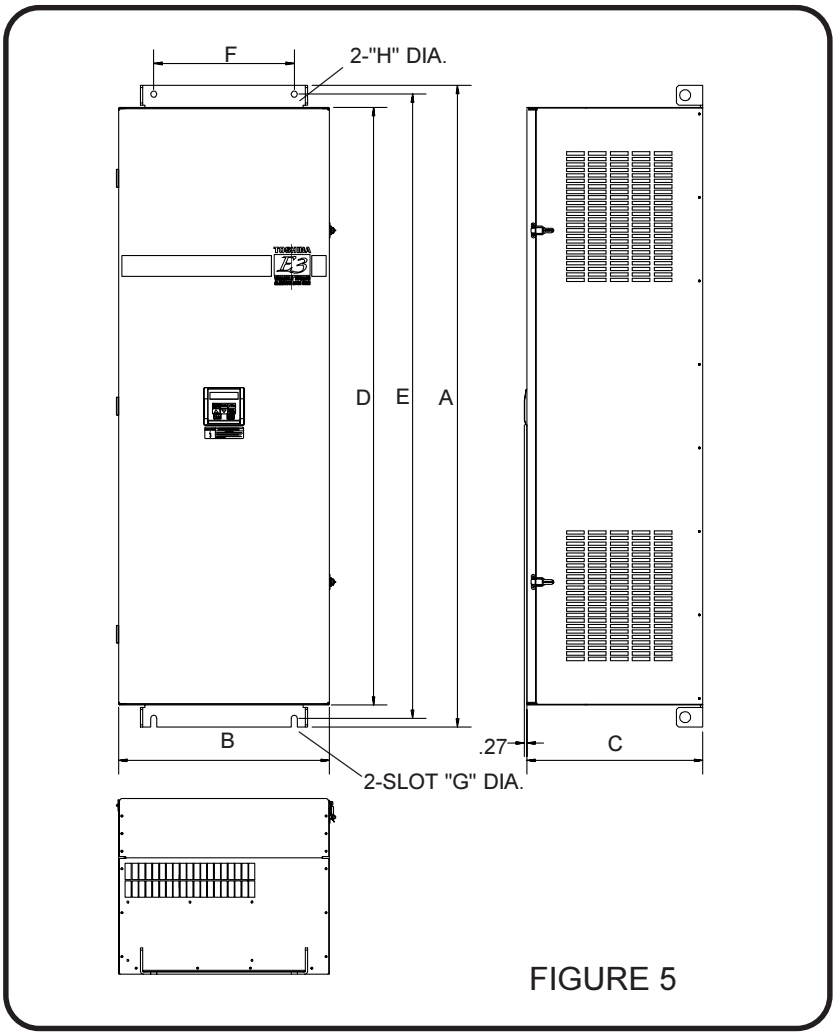

FIGURE 5

DIMENSIONS in inches(millimeters)

MODEL	FIG	A	B	C	D	E	F	G	H
VT130E3U435K	5	73.00(1854)	24.00(610)	20.00(508)	68.00(610)	71.00(1727)	16.00(406)	.69(18)	.69(18)

Shipping Weights

E3 Model	Shipping Weight Pounds	Shipping Weight Kg	E3 Model	Shipping Weight Pounds	Shipping Weight Kg
2035	17	7.7	4055	22	10.0
2055	18	8.2	4080	22	10.0
2080	26	11.8	4110	22	10.0
2110	28	12.7	4160	30	13.6
2160	29	13.2	4220	30	13.6
2220	67	30.4	4270	55	24.9
2270	70	31.8	4330	58	26.4
2330	72	32.7	4400	72	32.7
2400	176	79.8	4500	75	34.0
2500	180	81.6	4600	183	83.0
2600	200	90.7	4750	186	84.4
6060	20	9	410K	190	86.2
6120	61	28	412K	210	95.3
6160	65	30	415K	315	142.9
6220	67	31	420K	336	152.4
6270	110	50	425K	415	188.2
6330	110	50	430K	440	199.6
6400	111	51	435K	697	316.8
6500	190	86			
6600	196	89			
6750	200	91			
610K	302	137			
612K	304	138			

INDEX

A

Acc/dec #1/#2 selection Ad2 8-4,9-6
Acc/dec #1/#2 switching frequency Ad2F 8-3,9-5
Acc/dec complete detection bandwidth ..... brCH 8-6,9-9
Acc/dec pattern #1, #2 ..... SCu1, SCu2 8-2,8-3,9-4,9-5
Acc/dec pattern adjustment amounts (high) ..... SCH 8-2,9-4
Acc/dec pattern adjustment amounts (low) ..... SCL 8-2,9-4
Acc/dec time units selection ..... dSPt 8-33,9-35
Acceleration time #1, #2 ..... ACC1, ACC2 8-1,8-2,8-3,9-1,9-4,9-5
Adjustment range (parameters) ..... 8-1 to 8-37
After sales service 11-1
Alarm setting for cumulative run timer ..... OJt 8-15,9-24
AM terminal function selection ..... AMSL 8-30,9-32
AM/FM adjustment parameters ..... Gr.AM 8-30
Ammeter adjustment ..... AM 8-30,9-32
AM/FM adjustment parameters blind ..... bLAM 8-34,9-37
Ampacity 4-7
Analog input filter ..... InF 8-8,9-17
Analog meter adjustment 7-9
Auto-restart ..... ArSt 8-14,9-22
Auto-tuning ..... Mt.tn 8-35,9-38

B

Bandwidth Acc/Dec detection ..... brCH 8-6,9-9
Bandwidth of jump frequency #1 thru #3 ..... bFJ1-bFJ3 8-7,9-15,9-16
Base frequency #1, #2 ..... uL1, uL2 8-2,8-3,9-3,9-5
Base frequency voltage selection ..... uLSL 8-2,9-3
Basic operation ..... 7-1 to 7-20
Baud rates brt2 8-24,9-29
Bearing considerations 4-9
Bias/Gain adjustments ..... rr In, tr In 8-8,8-28,9-17,9-30
BIN input point #1, #2 output frequency ..... F-P9, F-PA 8-9,9-18
BIN input reference point #1, #2 ..... P9, PA 8-9,9-18
BIN input selection ..... bIIn 8-9,9-18
Blind function selection ..... bLnd 8-34,9-36
Blind/unblind function parameters 8-34,9-36,9-37

C

Capacitors (PF) precautions 2-2
Capacity of motor rating 8-35
Carrier frequency 3-2,8-7,9-16
Catch spinning motor ..... ArSt 8-14,9-22
CEC requirements 4-8
Circuit board (control) 5-2
Circuit board (terminal) 5-1
Circuit breaker size (MCCB) 4-7
Clearances 2-1
Coast stop 8-13
Codes (input and output terminal information) 11-8
Codes (regulatory) 2-1
Color (enclosure) 3-3
Command mode selection ..... CMOd 8-31,9-33
Commercial power/inverter output ..... CCHG 8-6,9-9
Communication parameters ..... Gr.tr ..... 8-24 to 8-28
Confirmation (wiring) 2-3
Connection diagrams ..... 4-1 to 4-6

INDEX (cont'd)

C (con't)

Continue mode for speeds #1 thru #15 ..... SLM 1-SLMF ..... 8-19 to 8-21
Communication parameters blind ..... bLtr 8-34,9-36
Communication selection ..... OPt 8-24,9-29
Control system 3-2
Cooling fan control selection ..... FAn 8-15,9-23
Cooling method 3-3
Cooling tower applications parameters blind bLO3 8-34,9-37
CPU version ..... uCPU 8-33,9-34
Cumulative run timer alarm setting ..... OUt 8-15,9-24
Current level of stall protection ..... SEL 1-SEL2 8-1,8-3,8-14,9-2,9-5,9-22
Current units selection ..... dSPC 8-33,9-35

D

Damper function 7-16
Data bits (number) 8-24
DC injection braking current ..... dbC 8-13,9-21
DC injection braking start frequency ..... dbF 8-13,9-21
DC injection time ..... dbt 8-13,9-21
Deceleration time #1, #2 ..... dEC 1, dEC2 8-1,8-2,8-3,9-1,9-4,9-5
Delay time FL output Ot2d 8-6,9-9
Delay time LOW output ..... Ot 1d 8-5,9-8
Delay time OUT output Ot3d 8-6,9-9
Delay time RCH output Ot0d 8-5,9-8
Detection bandwidth Acc/Dec 8-6
Detection level for low current ..... LLPC 8-14,9-23
Detection time for low current ..... LLPt 8-14,9-23
Detection time for undervoltage ..... UPt 8-14,9-23
Differential gain ..... GA 8-22,9-27
Dimensions ..... 12-1 to 12-2
DIP switch SW1 5-2
Direction selection ..... Fr 9-4,8-36,9-6,9-39
Display 6-1,6-2
Disposal 1-1
Drive continuation mode (speed #1 - #15) ..... SLM 1-SLMF 8-19,8-20,8-21,9-26
Drive time (speed #1 - #15) ..... SLt 1-SLtF 8-19,8-20,8-21,9-26
Drooping control ..... drPC 8-22,9-28
Drooping control amount ..... drPt 8-22,9-28
Dynamic braking resistor capacity ..... PbCP 8-13,9-20
Dynamic braking resistor value ..... Pbr 8-13,9-20
Dynamic braking selection ..... Pb 8-13,9-20

E

EEPROM version ..... uEEP 8-33,9-34
Electronic thermal protection level #1, #2 ..... tHr 1, tHr2 8-1,8-3,8-14,9-2,9-5,9-22
Emergency off 7-14
Emergency stop DC injection time ..... Edbt 8-13,9-21
Emergency stop selection ..... EStP 8-13,9-21
Enclosure 12-1
End frequency ..... F-En 8-7,9-15
Error messages 11-3,7-19
Examples, connection ..... 10-1 to 10-4
Examples, programming ..... 10-5 to 10-7
Exceeding motor peak voltage 4-9
Excitation current 10-7

INDEX (cont'd)

F

F terminal function 8-5, 9-7
Factory settings (parameters) ..... 8-1 to 8-32
Fan application parameters micro Gr.02 7-7,8-29
Fan applications parameters blind bL02 8-34,9-37
Fault clearing 11-3
Fault explanations 11-3
Fault trip saving ..... trCL 8-15,9-23
Feedback control parameters blind ..... bLFb 8-34,9-36
Feedback control selection FbP1 8-22,9-27
Feedback input signal selection ..... Fb In 8-22,9-27
Feedback parameters ..... Gr.Fb ..... 8-22 to 8-23
Fire speed (preset frequency speed 1) ..... FSor 7-16,8-10,9-18
FM terminal function selection ..... FMSL 8-30,9-31
Forward/reverse ..... Fr 8-4,8-36,9-6,9-39
Forward/reverse DC injection priority control ..... dbSL 8-13,9-21
Frequency accuracy 3-4
Frequency command value setting 7-1
Frequency display resolution ..... dSPF 8-33,9-35
Frequency meter adjustment ..... FM 8-30,9-31
Frequency point #1, #2 ..... PL, PH 8-28,9-30
Frequency priority selection #1-#2 ..... FC1-FC2 8-8,9-17
Frequency rating of motor ..... Mt.F 8-35,9-38
Frequency setting mode selection ..... FMOd 8-31,9-33,9-38
Frequency setting parameters ..... Gr.SF ..... 8-8 to 8-12
Frequency setting parameters blind ..... bLSF 8-34,9-36
Frequency setting resolution 3-2,8-33,9-35
Frequency units multiplication factor dSP2 8-33,9-35
Function selection FL output Ot2 8-6,9-9
Function selection LOW output Ot1 8-5,9-8
Function selection OUT output Ot3 8-6,9-9
Function selection RCH output Ot0 8-5,9-8
Functions (key) 6-3
Fundamental parameter #1 or #2 selection ..... PtP 8-4,9-6
Fundamental parameters #1 ..... Gr.F 8-2
Fundamental parameters #2 ..... Gr.F2 8-3
Fundamental parameters #2 blind bLF2 8-34,9-36
Fwd/Rev DC injection priority control 8-13,9-21

G

Grounding 4-9
Groups 7-7

H

Hold time FL output ..... Ot2H 8-6, 9-9
Hold time LOW output ..... Ot1H 8-5, 9-8
Hold time OUT output Ot3H 8-6,9-9
Hold time RCH output ..... Ot0H 8-5, 9-8
Humidity (relative) 3-3
Hysteresis of run frequency ..... FhYS 8-3,9-15

INDEX (cont'd)

I

Incoming power/inverter switching frequency ..... FCHG 8-6,9-9
Industrial application parameters 7-7,8-29
Industrial applications parameters selection ..... APL 8-1,8-31,9-2,9-33
Injection braking start frequency ..... dbF 8-13,9-20
Input filter (analog) ..... InF 8-8,9-17
Input selection for binary input ..... bIIn 8-9,9-18
Input selection for PG input ..... PGIn 8-9,9-18
Input selection for terminal IV ..... IvIn 8-8, 9-18
Input selection for terminal RR ..... rrIn 8-8, 9-17
Input selection for terminal RX ..... rEIn 8-8, 9-18
Input signals/impedance 3-4
Input terminal 0 - 11 ..... It0- It11 8-5,9-7,9-8
Input terminal 5 – 7 response time It5F- It7F 8-5,9-8
Input terminal R, S1 - S7 response time ..... ItF 8-5,9-8
Input terminal information decoding 11-8
Input terminal selection ..... It 8-5,9-7
Inspection of new unit 1-1
Installation precautions ..... 2-1 to 2-2
Integral gain ..... GI 8-22,9-27
Inverter number ..... Ino 8-24,9-29
Inverter trip codes ..... 7-19,10-3,11-3 to 11-7
Inverter typeform ..... FOrM 8-33,9-34
Isolation 2-3
IV analog input loss ..... LAIS 8-15,9-24
IV input selection ..... IvIn 8-1,8-8,9-1,9-18
IV point #1-#2 frequency F-P3, F-P4 8-1,8-8,9-1,9-18
IV reference point #1-#2 ..... P3, P4 8-1,8-8,9-1,9-18

J

Jog run frequency ..... JOG 8-9,9-18
Jog run mode 7-13
Jog stop control ..... JStP 8-9,9-18
Jump frequency #1 - #3 ..... FJ1-FJ3 8-7,9-15,9-16
Jump frequency band #1 - #3 ..... bFJ1-bFJ3 8-7,9-15,9-16
Jump frequency enable ..... FJm 8-7,9-15

K

Key functions 6-3

L

Lag time constant ..... GFS 8-22,9-27
LED charge indicator 5-1
LED local/remote indicator 6-1,6-3
LED manual/auto indicator 6-1,6-3
Level for overtorque trip ..... OEL 8-15,9-23
Load moment of inertia ..... Mt.IN 8-35,9-38
Lockout cancellation 9-34
Loss time limit ..... td 8-15,9-24
Low current detection level ..... LLPC 8-14,9-23
Low current detection selection ..... LLP 8-14,9-23
Low current detection time ..... LLPt 8-14,9-23
Lower limit frequency ..... LL 8-1,8-2,9-1,9-3
Low-speed signal output frequency ..... LF 8-6,9-9
Lug capacity 4-7

INDEX (cont'd)

M

Magnetic contactor 2-2
Maintenance 2-4
Master/slave selection ..... MSt 8-24,9-29
Maximum frequency ..... FH 8-2,9-3
Maximum voltage #1-#2 ..... uLu1, uLu2 8-2,9-3
MCCB precautions/selections 2-1,4-5,4-6
Meter adjustment 8-30,9-31,9-32
Mode activation of preset speeds ..... SrM 8-10,9-18
Mode of operating speeds 1 to 15 ..... SrM1-SrMF ..... 8-10 to 8-12
Monitor mode ..... 7-1 to 7-3
Motor operated pot (MOP) 10-6
Motor 110% overload time limit ..... OLt 8-1,8-14,9-2,9-22
Motor parameters ..... GrMt 7-7,8-35
Motor parameters blind ..... bLMt 8-34,9-37
Motor poles ..... Mt.P 8-35,9-38
Motor rated capacity ..... Mt.C 8-35,9-38
Motor rated frequency ..... Mt.F 8-35,9-38
Motor rated RPM ..... Mt.r 8-35,9-38
Motor rated voltage ..... Mt.u 8-35,9-38
Motor selection application 4-9
Motor shaft stationary control ..... dbLn 8-13,9-21
Motor speed search (auto-reatart) ..... ArSt 8-14,9-22
Motor type ..... Mt.t 8-35,9-38

N

NEC requirements 4-8
NEMA enclosures 3-1,3-3
Number of data bits SM78 8-24,9-29
Number of inverter (identifier) ..... Ino 8-24,9-29
Number of motor poles ..... Mt.P 8-35,9-38
Number of preset speeds ..... Sr.n 8-10,9-18

O

Overload selection ..... OLM 8-1,8-14,9-2,9-22
Operating mode preset speeds 1 thru 15 ..... SrM1-SrMF ..... 8-10 to 8-12
Operating panel 6-1, 6-2
Output contact functions ..... 9-13 to 9-14
Output frequency 3-2
Output signals 3-3
Output terminal 0-3 delay time Ot0d-Ot3d 8-5,9-8
Output terminal 0-3 function selection Ot0-Ot3 8-5,9-8
Output terminal 0-3 hold time Ot0H-Ot3H 8-5,9-8
Output terminal information decoding 11-8
Output terminal pulse frequency selection ..... OtFP 8-6,9-9
Output voltage regulation 3-2
Over torque trip level ..... OtL 8-15,9-23
Over torque trip selection ..... OtSL 8-15,9-23
Overide change multiplier Ord3 8-23,9-28
Overide control Ord1 8-23,9-28
Overide multiplier input selection Ord2 8-23,9-28
Overload protection 4-7,9-22
Overtorque trip selection 8-15,9-23
Overload reduction start-up frequency ..... OLF 8-14,9-22
Overvoltage stall protection ..... OPSS 8-13,9-20

INDEX (cont'd)

P

Panel control parameters ..... Gr.Pn 8-4
Panel control parameters blind ..... bLPn 8-34,9-36
Panel feedback control ..... PFbC 8-4,9-6
Panel keys 6-3
Panel layout 6-1
Panel lockout cancellation 9-34
Panel operation mode selection ..... PMOd 8-31,9-33
Panel reset selection ..... PrES 8-4,9-6
Parallel conductors 4-8
Parameter explanations ..... 9-1 to 9-40
Parameters adjustment range ..... 8-1 to 8-37
Parameters changed from factory default ..... Gr.U 7-6,7-7
Parameters factory default settings ..... 8-1 to 8-32
Parity ..... SNEO 8-24,9-29
Pass number ..... PASS 8-1,8-33,9-2,9-34
Pattern group #1 (number of cycles) PtL1 8-17,9-25
Pattern group #1 (speed selection #0 - #7) Pt10-Pt17 8-16,9-25
Pattern group #2 (number of cycles) PtL2 8-17,9-25
Pattern group #2 (speed selection #0 - #7) Pt20-Pt27 8-17,9-25
Pattern group #3 (number of cycles) PtL3 8-18,9-25
Pattern group #3 (speed selection #0 - #7) Pt30-Pt37 8-17,8-18,9-25
Pattern group #4 (number of cycles) PtL4 8-18,9-25
Pattern group #4 (speed selection #0 - #7) Pt40-Pt47 8-18,9-25
Pattern run continue mode speeds #1 - #15 ..... SLM1-SLMF ..... 8-19 to 8-21
Pattern run control parameters blind ..... bLPt 8-34,9-36
Pattern run mode ..... PtM 8-16,9-25
Pattern run parameters ..... Gr.Pt ..... 8-16 to 8-21
Pattern run selection ..... PSEL 8-16,9-25
Percentage of frequency at loss PO15 8-15,9-24
PG input point #1, #2 output frequency F-P7, F-P8 8-9,9-18
PG input reference point #1, #2 ..... P7, P8 8-9,9-18
PG input selection ..... PG In 8-9,9-18
PG input-number of phases ..... PGPH 8-22,9-28
PG input-number of pulses ..... PG 8-22,9-28
PID deviation limit selection ..... PuL 8-22,9-27
PID deviation lower limit ..... PuLL 8-22,9-27
PID deviation upper limit ..... PuUL 8-22,9-27
PID lower limit frequency P1LL 8-22,9-27
Potential terminal function 1t11 8-5,9-8
Power factor improvement precautions 2-2
Power/inverter switching frequency ..... FCHG 8-6,9-9
Power/inverter switching output ..... CCHG 8-6,9-9
Precautions (general) ..... 2-1 to 2-4
Preset frequency for speeds 2 thru 15 ..... Sr02-Sr15 ..... 8-10 to 8-12
Preset speed mode activation ..... Sr.M 8-10,9-18
Preset speed selection ..... Sr.n 8-10,9-18
Preset speeds operating mode 1 thru 15 ..... SrM1-SrMF ..... 8-10 to 8-12
Program mode ..... PrOG ..... 7-3, 8-3 to 8-35
Proportional gain ..... GP 8-22,9-27
Protection parameters ..... Gr.Pr ..... 8-13 to 8-15
Protection parameters blind ..... bLPr 8-34,9-36

INDEX (cont'd)

P (cont'd)

Protective functions 3-3
Pulse frequency selection ..... OLFP 8-6,9-9
Pulse train frequency output 3-3
Pump application parameters Gr.01 7-7,8-29
Pump applications parameters blind bL01 8-34,9-37
PWM carrier frequency ..... CF 8-7,9-16

Q

Qualified person iii

R

R terminal function ..... 1t0 ..... 8-5, 9-7
Rated frequency (drive) ..... Mt.F 8-35,9-38
Rated RPM ..... Mt.r 8-35,9-38
Rated voltage for drive 3-1
Rated voltage of motor ..... Mt.u 8-35,9-38
Regeneration power ride-through control ..... UuC 8-14,9-21
Regeneration power ride-through time ..... UuCt 8-14,9-22
Regulatory codes 2-1,2-2,4-6,4-7
Requesting service 11-1
RES terminal function 1t6 8-5,9-7
Resetting factory parameters ..... tYP 8-31
Resistor values for dynamic braking 9-20
Response time selection input 1tF, 1tF-1t7F 8-5
Retry selection ..... rtrY 7-16,7-20,8-13,9-21
Retry time setting ..... rtt 8-13,9-21
Retryable faults 9-14
Reverse operation enable ..... dISr 8-2,9-3
Reverse run selection ..... Fr 8-4,8-36,9-6,9-39
Ride-through control ..... UuC 8-14,9-21
ROM version ..... urOM 8-33,9-34
Rotation ..... Fr 8-4,8-36,9-6,9-39
RPM rating of motor ..... Mt.r 8-35,9-38
RR input point #1, #2 output frequency F-P1, F-P2 8-8,9-17
RR input reference point #1, #2 ..... P1, P2 8-8,9-17
RR input selection ..... rr In 8-8,9-17
RR input special function selection ..... Inrr 8-6,9-10
RS232 baud rate brt2 8-24,9-29
RS485 baud rate brt4 8-24,9-29
RS485/12-bit binary % bias, gain activation ..... tr Ir 8-28,9-30
RS485/12-bit binary frequency #1, #2 setting ..... F-PL, F-Ph 8-28,9-30
RS485/12-bit binary point #1, #2 setting ..... PL, Ph 8-28,9-30
Run frequency ..... Frun 8-7,9-15
Run frequency for jog ..... JOG 8-9,9-18
Run frequency hystersis ..... FhYS 8-7,9-15
RX input point #1, #2 output frequency F-P5, F-P6 8-8,9-18
RX input reference point #1, #2 ..... P5, P6 8-8,9-18
RX input selection ..... rE In 8-8,9-18

INDEX (cont'd)

S

S1 terminal function tt1 8-5,9-7
S2 terminal function tt2 8-5,9-7
S3 terminal function tt3 8-5,9-7
S4 terminal function tt4 8-5,9-7
S5 terminal function tt5 8-5,9-7
S6 terminal function tt6 8-5,9-7
S7 terminal function tt7 8-5,9-7
Scale factor dSP2 8-33,9-35
Searching (speed) ..... ArSt 8-14,9-22
Secondary magnetic contactors (MC) 2-2
Service after sales 11-1
Service environment 3-3
Service life 11-2
Setting signal point #1, #2 ..... F-PL, F-PH 8-28,9-30
Setup mode parameters ..... StuP 7-3,7-4,7-5,8-1
Shipping weights 12-3
Short-circuit detection on output ..... OCLS 8-14,9-23
Signal isolation 2-3
Special control parameters ..... Gr.SC 8-7
Special control parameters blind ..... bLSC 8-34,9-36
Speed #2 - #15 ..... Sr02-Sr15 8-10,8-11,8-12,9-18,9-19
Speed #1 thru #15 drive continue mode SLM1-SLMF 8-19,8-20,8-219-26
Speed #1 thru #15 drive time SLt1-SLtF 8-19,8-20,8-21,9-26
Speed reach HI frequency ..... HrCH 8-6,9-9
Speed reach LO frequency ..... LrCH 8-6,9-9
Speed run mode 1 - 15 ..... SrM1-SrMF 8-10,8-11,8-12,9-18,9-19
Speeds 2 thru 15 preset frequency ..... Sr02-Sr15 ..... 8-10 to 8-12
ST terminal function tt7 5-4,8-5,9-7
Stall protection current limit adjustment #1, #2 ... StL1-StL2 8-1,8-3,9-2,9-5,8-14,9-22
Stall protection enable #1, #2 ..... StC1, StC2 8-1,8-3,9-2,9-5,8-14,9-22
Standard setting mode selection ..... tYP 8-1,9-2,8-31,9-32
Standard specifications ..... 3-2 to 3-3
Start-up 2-4
Start-up frequency ..... F-St 8-7,9-15
Start-up frequency OL reduction ..... OLF 8-14,9-22
Stationary control ..... dbLn 8-13,9-21
Status monitor display selections MOn1-MOn4 8-33,9-35
Stop control for jog ..... JStP 8-9,9-18
Stop pattern selection ..... StPP 8-4,9-6
Storage 1-1
Switch on fly ..... SFLY 8-1,8-4,9-1,9-6
Switch SW1 (DIP) 5-2

T

Temperature (ambient) 3-3
Terminal functions/identification ..... 5-3 to 5-4
Terminal location 5-1
Terminal selection parameters ..... Gr.St ..... 8-5 to 8-6
Terminal selection parameters blind ..... bLSt 8-34,9-36

INDEX (cont'd)

T

Thermal protection #1, #2 ..... tHr1, tHr2 8-1,8-3,8-14,9-2,9-5,9-22
Three wire control 9-11
Time of ride-through ..... UuCt 8-14,9-21
Time units selection for Acc/dec ..... dSPt 8-33,9-35
Torque current 8-30,9-31
Tosline-F10 command input ..... M In 8-24,9-29
Tosline-F10 communication error mode ..... MErr 8-25,9-30
Tosline-F10 monitor output ..... MOUt 8-25,9-29
Tosline-S20 ..... SErr 8-28,9-30
Tosline-S20 ..... SrE 8-28,9-30
Tosline-S20 command input ..... S In 8-26,9-30
Tosline-S20 monitor output ..... SOUt 8-27,9-30
Tosline-S20 receive address ..... InA 8-25,9-30
Tosline-S20 ref frequency address ..... F InA 8-28,9-30
Tosline-S20 ref frequency address selection ..... F InS 8-28,9-30
Tosline-S20 transmit address ..... OUtA 8-25,9-30
Transistor type 3-2
Trim 9-28
Trip clear command (clear fault/s) ..... CLr 7-15,11-3
Trip codes ..... 7-19 to 7-20
Trip saving on fault enable ..... trCL 8-15,9-23
Trip selection for undervoltage ..... UPSL 8-14,9-23
Troubleshooting 11-3
True Torque Control 10-7
Type of motor ..... MtE 8-35,9-38
Typeform ..... FOrM 8-33,9-34

U

Unblind/blind function parameters 8-34,9-36,9-37
Unblinding 9-2
Undervoltage detection time ..... UPt 8-14,9-23
Undervoltage trip selection ..... UPSL 8-14,9-23
Unlock combination 9-34
Upper limit frequency ..... UL 8-1,8-2,9-1,9-3
Utility parameters ..... GrUt ..... 7-7,8-31 to 8-34
V/F pattern ..... Pt 8-2,9-3

V

Vibration 3-3
Voltage boost #1, #2 ..... vb1, vb2 8-2,9-5
Voltage rating of motor ..... Mtv 8-35,9-38
Voltage units selection ..... dSPv 8-33,9-35

W

Weights (shipping) 12-3
Wire sizes 4-7,4-8
Wiring confirmation 2-3

TOSHIBA

TOSHIBA INTERNATIONAL CORPORATION

INDUSTRIAL DIVISION
13131 West Little York Rd., Houston Texas 77041
Tel: [800] 231-1412 Fax: [713] 466-8773 Telex: 762078
World Wide Web http://www.tic.toshiba.com

Printed in U.S.A.